SYMBIO ™ 700 INFORMATION & TROUBLESHOOTING MANUAL

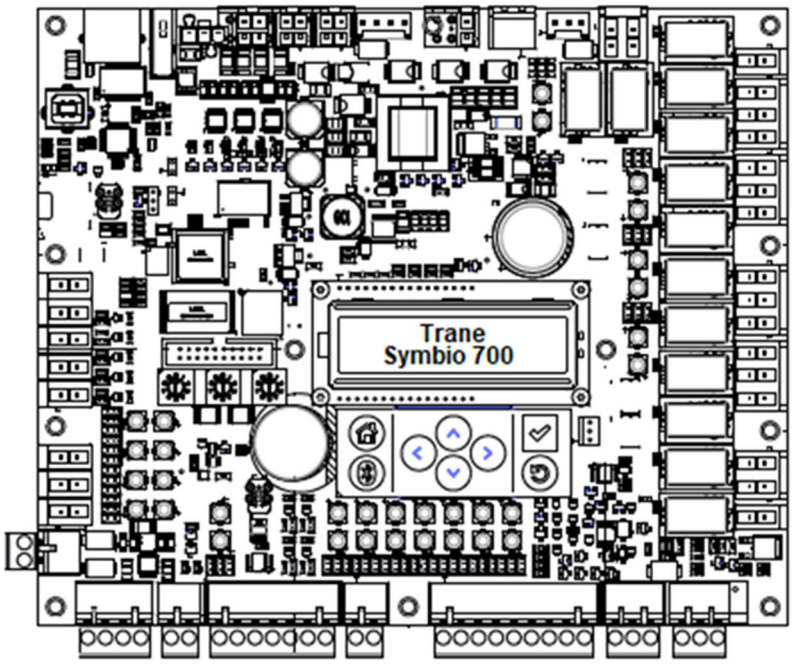

⚠ SAFETY WARNING

Only qualified personnel should install and service the equipment. The installation, starting up, and servicing of heating, ventilating, and air-conditioning equipment can be hazardous and requires specific knowledge and training. Improperly installed, adjusted or altered equipment by an unqualified person could result in death or serious injury. When working on the equipment, observe all precautions in the literature and on the tags, stickers, and labels that are attached to the equipment.

MAY 2021 **~UNOFFICIAL~**

Preface

This manual is a compilation of information gathered from PowerPoints, IOMs, other published manuals, information from the Engineering Team, information from hours of bench testing in Light Commercial Tech Support, information from Gedankenexperiments and information gathered from Tech Support phone troubleshooting with field personnel.

Electrical measurements recorded in this manual were done with my personal voltmeter.

This manual is not supported or approved by the Trane Literature Department and The Trane Company assumes no liability concerning the accuracy of the contents.

Please look over the warnings on pages 3 – 6 and apply them to whatever you are doing on the unit.

Rickie L. Keel

Light Commercial Tech Support

Introduction

This publication covers both electromechanical and Symbio™ controls. Due to the more complex application and service opportunities, greater emphasis is placed on units with Symbio™ controls.

This publication does not cover all aspects of service. It assumes the service person is an experienced commercial service technician with a strong background in electrical controls and DC circuits. If you are not experienced and fully qualified in HVAC service, do not attempt to use this manual to service equipment.

Important Environmental Concerns

Scientific research has shown that certain man-made chemicals can affect the earth's naturally occurring stratospheric ozone layer when released to the atmosphere. In particular, several of the identified chemicals that may affect the ozone layer are refrigerants that contain Chlorine, Fluorine and Carbon (CFCs) and those containing Hydrogen, Chlorine, Fluorine and Carbon (HCFCs). Not all refrigerants containing these compounds have the same potential impact to the environment. Trane advocates the responsible handling of all refrigerants-including industry replacements for CFCs and HCFCs such as saturated or unsaturated HFCs and HCFCs.

Important Responsible Refrigerant Practices

Trane believes that responsible refrigerant practices are important to the environment, our customers, and the air conditioning industry. All technicians who handle refrigerants must be certified according to local rules. For the USA, the Federal Clean Air Act (Section 608) sets forth the requirements for handling, reclaiming, recovering and recycling of certain refrigerants and the equipment that is used in these service procedures. In addition, some states or municipalities may have additional requirements that must also be adhered to for responsible management of refrigerants. Know the applicable laws and follow them.

⚠ WARNING

Proper Field Wiring and Grounding Required!

Failure to follow code could result in death or serious injury.

All field wiring MUST be performed by qualified personnel. Improperly installed and grounded field wiring poses FIRE and ELECTROCUTION hazards. To avoid these hazards, you MUST follow requirements for field wiring installation and grounding as described in NEC and your local/state/national electrical codes.

⚠ WARNING

Personal Protective Equipment (PPE) Required!

Failure to wear proper PPE for the job being undertaken could result in death or serious injury. Technicians, in order to protect themselves from potential electrical, mechanical, and chemical hazards, MUST follow precautions in this manual and on the tags, stickers, and labels, as well as the instructions below:

- **Before installing/servicing this unit, technicians MUST put on all PPE required for the work being undertaken (Examples; cut resistant gloves/sleeves, butyl gloves, safety glasses, hard hat/bump cap, fall protection, electrical PPE and arc flash clothing). ALWAYS refer to appropriate Safety Data Sheets (SDS) and OSHA guidelines for proper PPE.**
- **When working with or around hazardous chemicals, ALWAYS refer to the appropriate SDS and OSHA/GHS (Global Harmonized System of Classification and Labelling of Chemicals) guidelines for information on allowable personal exposure levels, proper respiratory protection and handling instructions.**
- **If there is a risk of energized electrical contact, arc, or flash, technicians MUST put on all PPE in accordance with OSHA, NFPA 70E, or other country-specific requirements for arc flash protection, PRIOR to servicing the unit. NEVER PERFORM ANY SWITCHING, DISCONNECTING, OR VOLTAGE TESTING WITHOUT PROPER ELECTRICAL PPE AND ARC FLASH CLOTHING. ENSURE ELECTRICAL METERS AND EQUIPMENT ARE PROPERLY RATED FOR INTENDED VOLTAGE.**

⚠ WARNING

Follow EHS Policies!

Failure to follow instructions below could result in death or serious injury.

- **All Trane personnel must follow the company's Environmental, Health and Safety (EHS) policies when performing work such as hot work, electrical, fall protection, lockout/ tagout, refrigerant handling, etc. Where local regulations are more stringent than these policies, those regulations supersede these policies.**
- **Non-Trane personnel should always follow local regulations.**

Copyright

This document and the information in it are the property of Trane, and may not be used or reproduced in whole or in part without written permission. Trane reserves the right to revise this publication at any time, and to make changes to its content without obligation to notify any person of such revision or change.

Trademarks

All trademarks referenced in this document are the trademarks of their respective owners.

⚠ WARNING

Refrigerant under High Pressure!

Failure to follow instructions below could result in an explosion which could result in death or serious injury or equipment damage.

System contains refrigerant under high pressure. Recover refrigerant to relieve pressure before opening the system. See unit nameplate for refrigerant type. Do not use non-approved refrigerants, refrigerant substitutes, or refrigerant additives.

⚠ WARNING

Explosion Hazard!

Failure to follow instructions below could result in an explosion which could result in death or serious injury, and equipment damage.

NEVER bypass system safeties in order to pump down the unit component's refrigerant into the microchannel heat exchanger (MCHE) coil. Do NOT depress the compressor contactor since it effectively bypasses the high-pressure control.

NOTICE

System Component Damage!

These air handlers are shipped with a dry nitrogen holding charge in the coil. Depress or remove the access valve cone to bleed off the nitrogen prior to brazing. Temporarily cap off tubes if the refrigerant line connections are to be made later.

⚠ WARNING

R-410A Refrigerant under Higher Pressure than R-22!

Failure to use proper equipment or components as described below, could result in equipment failing and possibly exploding, which could result in death, serious injury, or equipment damage.

The units described in this manual use R-410A refrigerant which operates at higher pressures than R-22. Use ONLY R-410A rated service equipment or components with these units. For specific handling concerns with R-410A, please contact your local Trane representative.

⚠ WARNING

Prevent Injury!

Due to agency safety requirements, no schrader core is to be installed beneath the HPCO. Removal of the HPCO without evacuating the system charge could cause injury and release of refrigerant.

⚠ WARNING

Hazardous Voltage w/Capacitors!

Failure to disconnect power and discharge capacitors before servicing could result in death or serious injury.

Disconnect all electric power, including remote disconnects and discharge all motor start/run capacitors before servicing. Follow proper lockout/tagout procedures to ensure the power cannot be inadvertently energized. For variable frequency drives or other energy storing components provided by Trane or others, refer to the appropriate manufacturer's literature for allowable waiting periods for discharge of capacitors. Verify with a CAT III or IV voltmeter rated per NFPA 70E that all capacitors have discharged.

For additional information regarding the safe discharge of capacitors, see PROD-SVB06-EN.*

NOTICE

Use Copper Conductors Only!

Failure to use copper conductors could result in equipment damage as the equipment was not designed or qualified to accept other types of conductors.

⚠ WARNING

Proper Field Wiring and Grounding Required!

Failure to follow code could result in death or serious injury.

All field wiring MUST be performed by qualified personnel. Improperly installed and grounded field wiring poses FIRE and ELECTROCUTION hazards. To avoid these hazards, you MUST follow requirements for field wiring installation and grounding as described in NEC and your local/ state/national electrical codes.

⚠ WARNING

Live Electrical Components!

Failure to follow all electrical safety precautions when exposed to live electrical components could result in death or serious injury.

When it is necessary to work with live electrical components, have a qualified licensed electrician or other individual who has been properly trained in handling live electrical components perform these tasks.

Contents

Preface 2
Control Box Layouts 13
Single Fan Condenser 13
Dual Fan Condenser 13
Air Handler 14
Symbio™ 700 Unit Controller (UC) 15
Symbio™ 700 Unit Controller (UC) Troubleshooting Info 16
Symbio™ 700 Unit Controller LEDS 17
LED Description Notes 17
Symbio™ 700 Unit LED Functions 18
Symbio 700 Factory Connections 19
Symbio 700 Field Connections 22
Odyssey Adapter Board 23
Troubleshooting the Compressor Circuit(s) 24
Circuit 1 24
Circuit 2 25
Compressor Control Circuit Troubleshooting Tips - *derived from bench testing***.** 26
Compressor Protection – (HPC, DTL or Aux switch proving trip) 29
Compressor "X" Proving Trip & Lockout 29
Two cases can cause a "Circuit X Proving Lockout" event: 29
Compressor X Contactor Failure (Manual Reset) 29
Compressor Protection – Low Pressure Cutout Control 30
Prior to Compressor Startup: 30
After Compressor Startup: 30
Circuit X LPC Trip (Auto-Reset): 30
For Cooling Only Units or Heat Pumps in Active Cooling: 30
For Heat Pump Units in Active Mechanical Heating and Outdoor Air Temperature ≥ 0°F 31
Circuit "X" Low Pressure Lockout (Manual Reset) 31
Odyssey Relay Board 32
Odyssey Options Board – BAYMODU001 35
Indoor Options Module Factory Connections 36
Indoor Options Module Communication Troubleshooting 38

Adding Electric Heat to a Symbio Air Handler paired with a Symbio Condenser 40
Electric Heat Adapter Harnesses 41
Phase Monitor 42
Phase Monitor Wire Connections 43
Emergency Stop 44
Supply Air Tempering 45
Heat Pump Heating Lockout 46
When the Outdoor Air Temperature Active ≤ Heat Pump Heating Lockout Setpoint – Active: 46
When the Outdoor Air Temperature Active > Heat Pump Heating Lockout Setpoint – Active + 5F: 46
Symbio 700 Demand Defrost Operation - *derived from bench testing* 47
First Defrost permit conditions after Power Up. 47
Subsequent Defrosts permit conditions. 47
Sequence of Operation 47
Defrost Termination 47
Defrost Cycle Example 48
Independent Circuit Defrost Operation 48
Default Mode 48
Condenser Defrost (Heat Pumps Only) 49
Demand Defrost Control 49
Temperature Sensors (NTC) 51
Zone Sensor Mode 54
Zone Sensor Setpoint 54
Zone Sensor Info 55
Additional Thermostat / Zone Sensor Info 55
BAYSENS800 wiring 56
BAYSENS800 Setup in the Phone APP 57
BAYSENS800 Setup in TU 57
BAYSENS135 / X13790886 / Wiring 58
Zone Sensor Averaging 60
Remote Sensor Wiring 61
Condenser Fan Rotation for Dual Fan Units 62
Condenser Fan Staging 63
Dual condenser fan - shared airstream *manifolded* **(cooling only)** 63

Dual condenser fan - independent airstream *dual* (cooling only and heat pump) 63
Compressor Staging 64
Cooling Only (Electric Heat) – CVZT & VVZT 64
Dual compressor cooling staging (manifold or independent) 64
Dual unloading compressor cooling staging (10 and 20 ton) 64
Heat Pump – CVZT & VVZT 64
Dual compressor cooling staging (manifold or independent) 64
Constant Volume/Multi-Speed Fan Space Temperature Control (CVZT) 65
Space Temperature Recovery 65
Supply Fan Control 65
Variable Volume Fan Space Temperature Control (SZVAV/VVZT) 66
Supply Fan Control 66
VVZT DAT Control Mode 67
Supply Fan Speed Control 68
Single-Speed, belt-driven fans 68
2-Speed & Variable Speed VFD-driven fans 68
Supply Fan Status Points 68
Single-Speed 68
VFD-driven 68
Fan Setpoints with VFD-driven Fan Types 68
Supply Fan Maximum Speed Setpoint 68
Supply Fan Minimum Speed Setpoint 69
Supply Fan Percentages 69
Multi-speed minimum supply fan speeds 69
Variable speed minimum supply fan speeds 69
Airflow Adjustments 70
Constant Volume Units 70
2 Stage Airflow/Single Zone VAV (Symbio Cond Only) 70
2 Stage Airflow (Electromechanical Cond Only) 70
Symbio TR-150 VFD Parameters 71
VFD Parameter Info 73
VFD Harness Part Numbers 73
VFD Faults requiring Manual Reset 73

Diagnostic: Supply Fan Failure 73
Supply Fan VFD Communication Status 73
TR150 VFD Communication Troubleshooting 74
Evaporator Defrost Control 76
If configured for Evaporator Defrost Control = Enabled: 76
If configured for FroStat = Installed: 76
Force Database Clear on a Symbio 700 77
Replacing a Symbio 700 Board 78
Things you can do with Tracer TU 79
Adding unit information to a new board 79
Clearing Alarm History 79
Clear Controller 79
Download the Phone App! 80
Symbio Service & Installation (mobile app) Overview 81
Bluetooth Connection & Pairing 81
Login 83
Unit List 84
HOME 86
SETTINGS 89
Manage Settings 89
View Configuration Sub-Menu 92
STATUS 99
ALARMS 104
TOOLS 105
Service Test Mode 106
Service 108
IMC Link Reset 110
Customer Connection Polarity 111
Backup 114
Restore 115
Update Firmware 117
Restart Controller 119
Notes 120

Notes 121
Symbio 700 UC Onboard User Interface Menu Structure 122
Symbio 700 UC Onboard User Interface Menu Items 123
HOME 124
Status 125
Active Setpoints 125
System 126
Indoor 128
Refrigeration 129
Heat 130
Settings 131
System 131
Indoor 132
Refrigeration 132
Heat 133
Service 134
Diagnostics 134
Test 134
Statistics Reset 134
Options Modules 135
Modbus 135
Utilities 136
About 136
Active Configuration 136
Edit Configuration 137
Display 138
Date and Time 138
LON 138
Test Mode on an Odyssey Symbio using the Onboard User Interface. 139
Initiating Test Mode 139
Exiting Test Mode 139
Interconnecting Wiring Between Condensers and Air Handlers 140
Communication Wire Info. 140

Thermostat Wire Info. 141
"Officially" Allowed Pairings 141
Pairing A: Symbio Condenser with Symbio CV Air Handler or Pairing B: Symbio Condenser Symbio SZVAV / 2 Speed Air Handler 143
Pairing C: Legacy Electromechanical Condenser with Symbio 2-Speed Air Handler 145
Symbio Condenser (Cooling or Heat Pump) with Legacy CV Air Handler 146
Symbio Condenser (Cooling Only) with Legacy 2 Speed Electromechanical Air Handler 147
Legacy Electromechanical Condenser with Symbio CV Air Handler 148
Legacy Reliatel Condenser (Cooling or Heat Pump) with Symbio CV Air Handler 149
Odyssey Air Handler R22 and R410a TXV Valve Conversion Guide 150
Odyssey Refrigeration Miscellaneous Info. 151
Microchannel Heat Exchanger Condensers (MCHE) 151
Solenoid Valves 151
Moisture-Indicating Sight glass 151
Hot Gas Bypass 152
Line Sizing 152
Oil-Traps 152
Leak Checking 152
System Evacuation 152
Unit Charging 153

Control Box Layouts

Single Fan Condenser

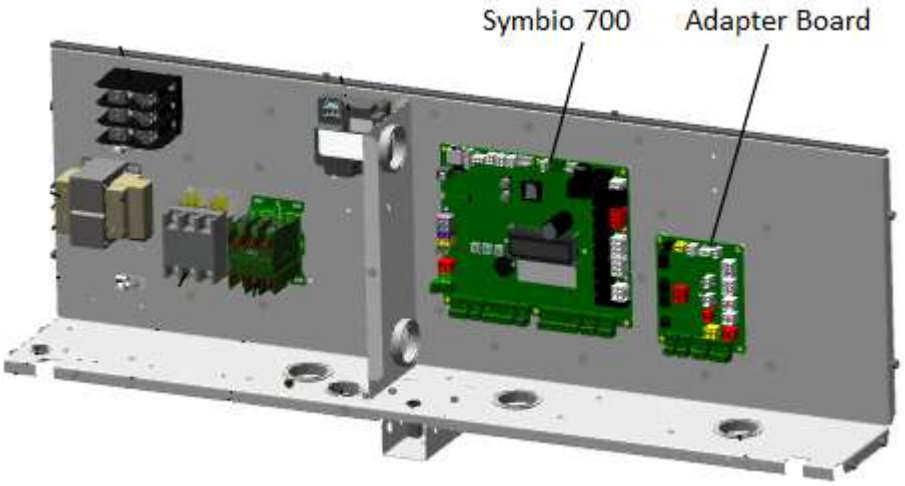

Dual Fan Condenser

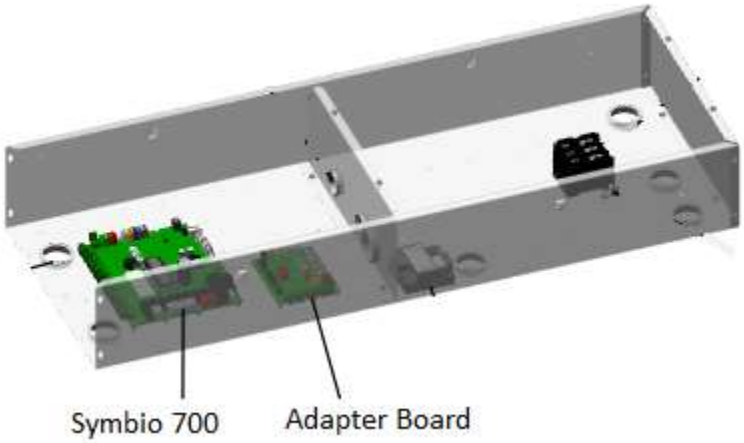

Air Handler



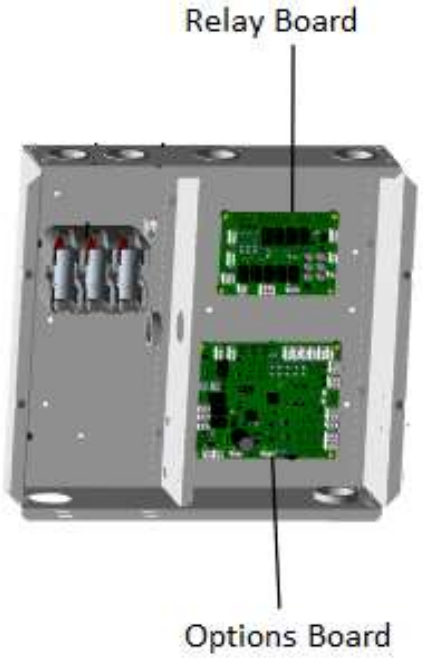

Symbio™ 700 Unit Controller (UC)

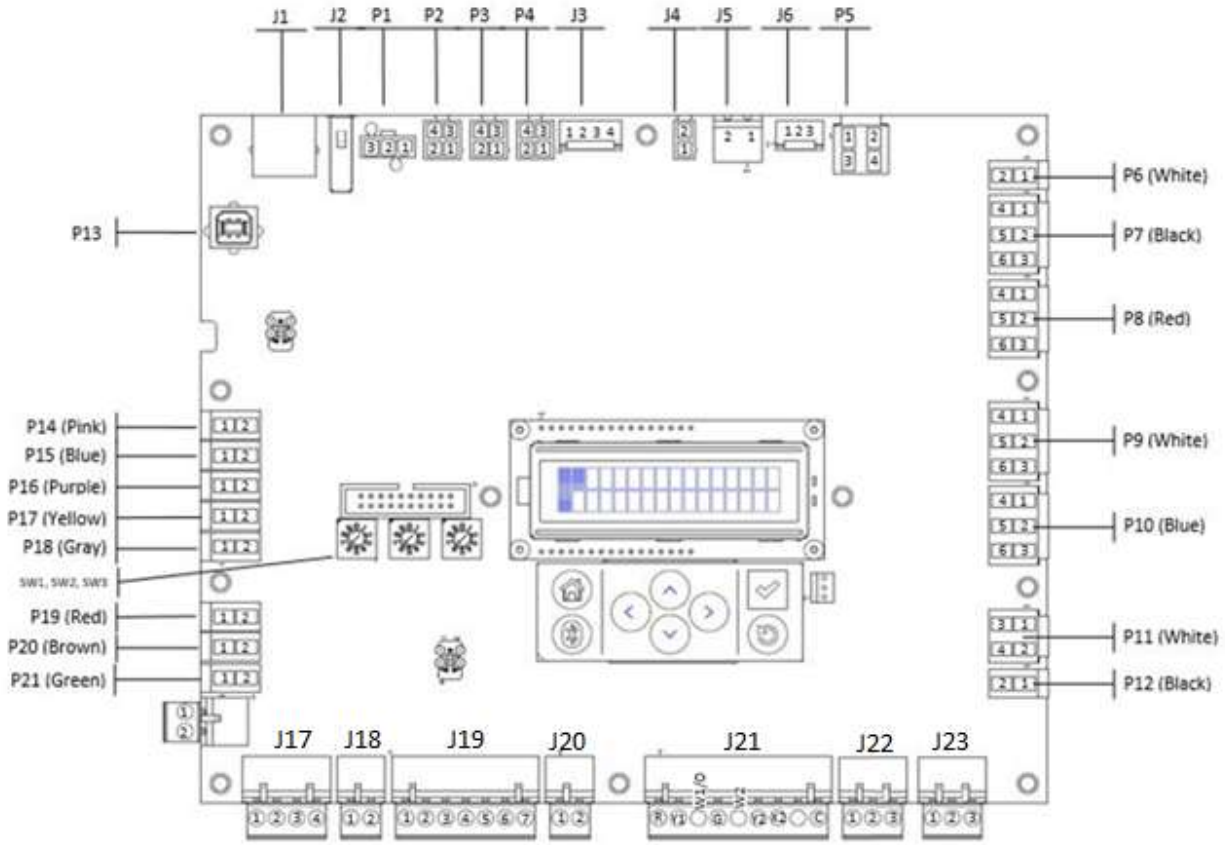

Main Unit Controller

Includes all IO required to control a base unit

Included as base controller on all Symbio™ Condensers.

The Symbio 700 controller provides a 2 X 16 backlit LCD display on the middle of the controller.

The onboard user interface includes a Bluetooth pair button to pair with the Symbio 700 controller for use with the mobile service tool.

Symbio™ 700 Unit Controller (UC) Troubleshooting Info

Note: J19-7, J20-1 and J21-1 are current limited to 1.1 amp.

Note: J6-1 (Phase Monitor), P19-1 & P20-1 (LPC), J16-1 (Demand Limit), J22-1 (CO_2), J23-1(Humidity) are current limited to .3 amps.

Note: J2 is not intended to charge mobile phones.

Be aware on of wire colors, for some reason Black is 24 VAC Hot and Red is 24 VAC Common.

24 VAC power for the board comes in on J4-1 & 2. This comes from the Adapter Board J2.

Plugs P7 (Condenser Fan Out) and P11 (SOV 1 & 2 Out) are powered from P6, which is powered from either Adapter Board J1 or TNS2 on 10T and 20T Dual TTA's and all TWA units.

Symbio™ 700 Unit Controller LEDS

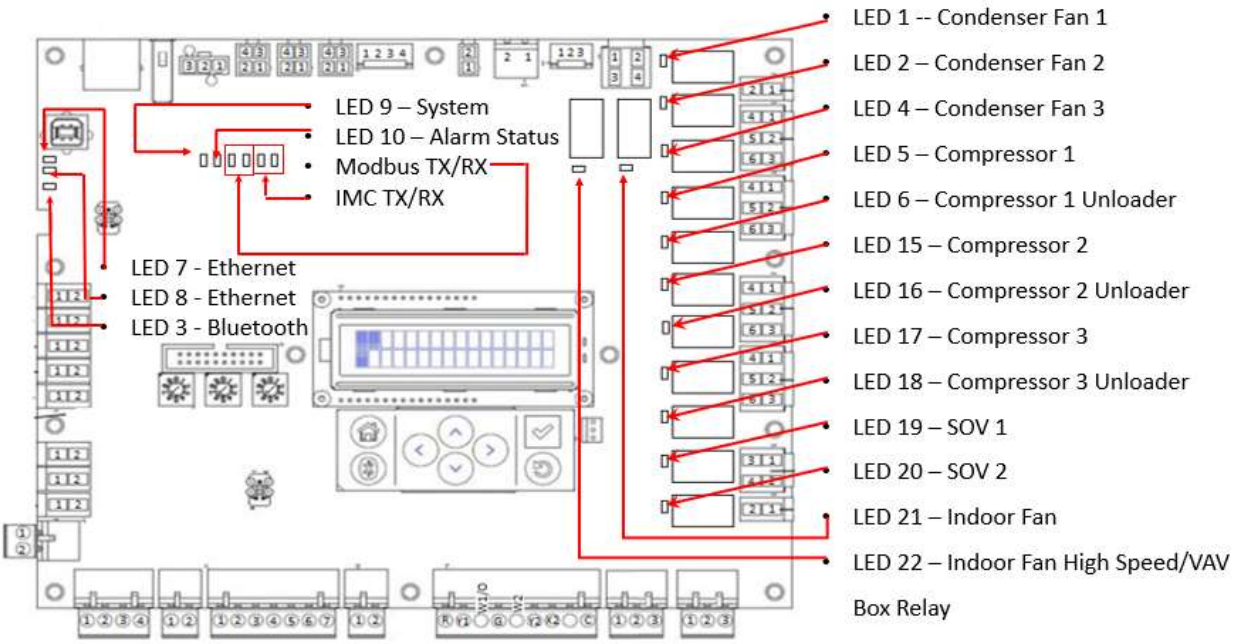

LED Description Notes

- The LEDs for the internal relays along the right-hand side of the Symbio 700 board illuminate a solid green color when the relay is energized. The description in the illustration has which output is active.
- LED 3 – Bluetooth is on when Bluetooth is connected and flashes during pairing, otherwise, it is off.
- LED 7 – Ethernet Activity light is for the Ethernet Port. The light will flash green whenever there is network traffic.
- LED 8 – Ethernet Link light is also for the Ethernet Port. The light will be solid yellow whenever the Symbio 700 board is connected to a router or network switch.
- LED 9 – System light is normally a solid light when power is applied and after the boot sequence
- LED 10 – Alarm Status is normally off unless there is an active alarm then it will flash a red light
- MODBUS TX/RX – Normally off unless the AHU is configured for SZVAV or multispeed. When normally communicating with the VFD, both lights will pulse at the same time with about a second in between flashes and a couple quick pulses every now and then.
- IMC TX/RX – Normally has very fast pulsing almost making the lights look just dim

Symbio™ 700 Unit LED Functions

LED 1 – P7-1 (Black)	SOLID ON=When output is on, OFF=When output is off
LED 2 – P7-3 (Black)	SOLID ON=When output is on, OFF=When output is off
LED 3 – Bluetooth	OFF = Bluetooth radio is not available ON = Active Bluetooth connection in process BLINKING = Controller is waiting for a Bluetooth connection
LED 4 – P7-5 (Black)	SOLID ON=When output is on, OFF=When output is off
LED 5 – P8-5 (Red)	SOLID ON=When output is on, OFF=When output is off
LED 6 – P8-6 (Red)	SOLID ON=When output is on, OFF=When output is off
LED 7 – Ethernet	SOLID ON = When link is connected OFF = When link is disconnected
LED 8 – Ethernet	BLINKING = Activity on link, OFF = No activity on link
LED 9 – System	SOLID GREEN = All objects in a normal state OFF = Controller not powered or is in an alarm condition
LED 10 – Alarm Status	BLINKING RED = At least one object is in a not normal state OFF = Controller not powered or is in a normal state
LED 11 – Modbus RTU Link (VFD)	TX BLINKING GREEN = when Modbus data is sent
LED 12 – Modbus RTU Link (VFD)	RX BLINKING YELLOW = when Modbus data is received
LED 13 – IMC (Options board)	IMC Link TX BLINKING GREEN = when IMC data is sent
LED 14 – IMC (Options Board)	IMC Link RX BLINKING YELLOW = when IMC data is received
LED 15 – P9-5 (White)	SOLID ON=When output is on, OFF=When output is off
LED 16 – P9-6 (White)	SOLID ON=When output is on, OFF=When output is off
LED 17 – P10-5 (Blue)	SOLID ON=When output is on, OFF=When output is off
LED 18 – P10-6 (Blue)	SOLID ON=When output is on, OFF=When output is off
LED 19 – P11-1 (White)	SOLID ON=When output is on, OFF=When output is off
LED 20 – P11-3 (White)	SOLID ON=When output is on, OFF=When output is off
LED 21 – P5-2	SOLID ON=When output is on, OFF=When output is off
LED 22 – P5-4	SOLID ON=When output is on, OFF=When output is off
LED 23 – BACnet MS/TP Link	RX BLINKING YELLOW = when BACnet data is received
LED 24 – BACnet MS/TP Link	TX BLINKING GREEN = when BACnet data is received

Symbio 700 Factory Connections

Factory Connection	Function	Pin #	Signal
P1	Modbus Communication	1	GND
		2	Modbus -
		3	Modbus +
P2	IMC Communication	1	24VAC Out
		2	GND
		3	IMC +
		4	IMC -
P3	IMC Communication	1	24VAC Out
		2	GND
		3	IMC +
		4	IMC -
P4	IMC Communication	1	24VAC Out
		2	GND
		3	IMC +
		4	IMC -

Factory Connection	Function	Pin #	Signal
P5	Indoor Fan	1	Common
		2	Indoor Fan Run Command
		3	Common
		4	Indoor Fan High Speed
P6	Power for Outdoor Fan and SOV Outputs	1	24VAC In
		2	GND
P7	Outdoor Fan Outputs	1	Outdoor Fan 1
		2	GND
		3	Outdoor Fan 2
		4	GND
		5	Outdoor Fan 3
		6	GND
P8	Compressor 1 Circuit	1	24VAC Pass-through
		2	24VAC Pass-through
		3	Compressor 1 Proving
		4	Common
		5	Compressor 1 Run
		6	Compressor 1 Unloader
P9	Compressor 2 Circuit	1	24VAC Pass-through
		2	24VAC Pass-through
		3	Compressor 2 Proving
		4	Common
		5	Compressor 2 Run
		6	Compressor 2 Unloader
P11	Switchover Valves	1	Switchover Valve 1
		2	GND
		3	Switchover Valve 2
		4	GND
P12	ECM Fan Control	1	ECM Fan Control Output
		2	GND
P13	USB Service Tool		
P14	Spare Input	1	Spare
		2	GND
P15	Outdoor Air Temperature	1	Outdoor Air Temperature
		2	GND
P16	Coil Temperature 1	1	Coil Temperature 1 Input
		2	GND
P17	Coil Temperature 2	1	Coil Temperature 2 Input
		2	GND
P19	Circuit 1 LPC	1	24Vac Out
		2	Circuit 1 LPC Input

Factory Connection	Function	Pin #	Signal
P20	Circuit 2 LPC	1	24Vac Out
		2	Circuit 2 LPC Input
P21	Spare	1	24Vac Out
		2	Spare
J1	Ethernet		
J2	USB Host [a]		
J3	IMC Communication	1	24V DC Power out
		2	GND
		3	IMC +
		4	IMC -
J4	Input Power	1	24VAC In/Out
		2	GND
J5	Input Power	1	24VAC In/Out
		2	GND
J6	Phase Monitor Input	1	24VAC Out
		2	Phase Monitor Input
		3	GND
SW1	BACnet Address	NA	
SW2	BACnet Address	NA	
SW3	BACnet Address	NA	

Symbio 700 Field Connections

Customer Connections	Function	Pin #	Signal
J16	Demand Shed/Demand Limit Connection	1	24VAC Out
		2	Demand Shed/Demand Limit Input
J17	BACnet Communication Connections	1	BACnet +
		2	BACnet -
		3	BACnet +
		4	BACnet -
J18	Equipment Shutdown Input Connections	1	24VAC Out
		2	Equipment Shutdown Input
J19	Zone Sensor Connections	1	Space/Zone Temperature
		2	GND
		3	Cool Setpoint
		4	Mode
		5	Heat Setpoint
		6	GND
		7	24VAC Out
J20	Occupancy Connections	1	24VAC Out
		2	Occupancy Switch
J21	Thermostat Connections	1	24VAC Out
		2	Y1
		3	W1/O
		4	G
		5	W2
		6	Y2
		7	X2
		8	1.5K Ohms Pull-down
		9	GND
J22	Space CO2	1	24VDC Out
		2	Input (0-10Vdc)
		3	GND
J23	Space Humidity	1	24VDC Out
		2	Input (4-20mA)
		3	GND
		4	NA

Odyssey Adapter Board

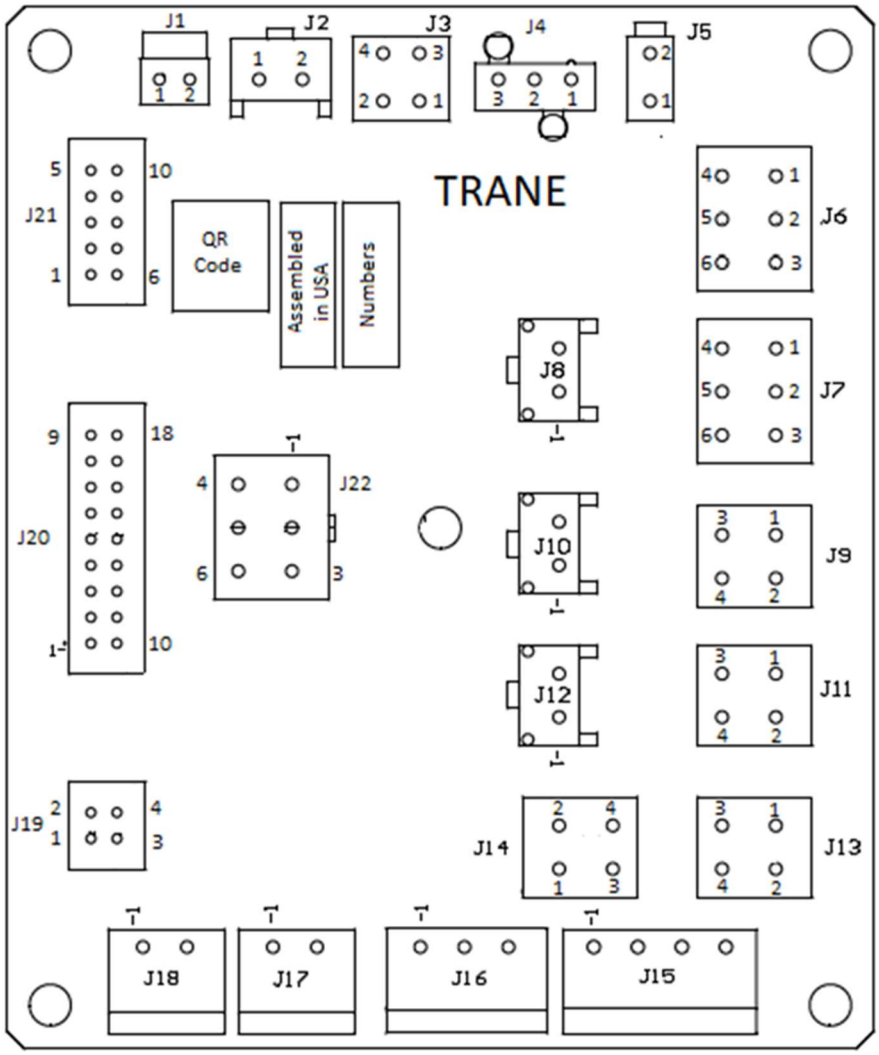

Electrical Integration board with a series of connectors and traces.

Eliminates complex harness designs associated with equipment protection features, enables proper power distribution between components in the condenser, and provides connection points between Condenser and Air Handler.

Included in all Odyssey Symbio™ Condensers.

Troubleshooting the Compressor Circuit(s)

Circuit 1

Compressor 1 run command from UC P8-5 to Adapter Board J20-5.

Then to Adapter Board J13-1 by board trace.

Out to the HPC and back to Adapter Board J13-2.

Then to Adapter Board J13-3 by board trace.

Out to DTL and back to the Adapter Board J13-4.

Then to Adapter Board J7-1 by board trace, then out to CC1 coil.

The Proving Circuit is J5-1 to J22-1 through the Aux switch, to J22-2, to J20-3, then to UC P8-3.

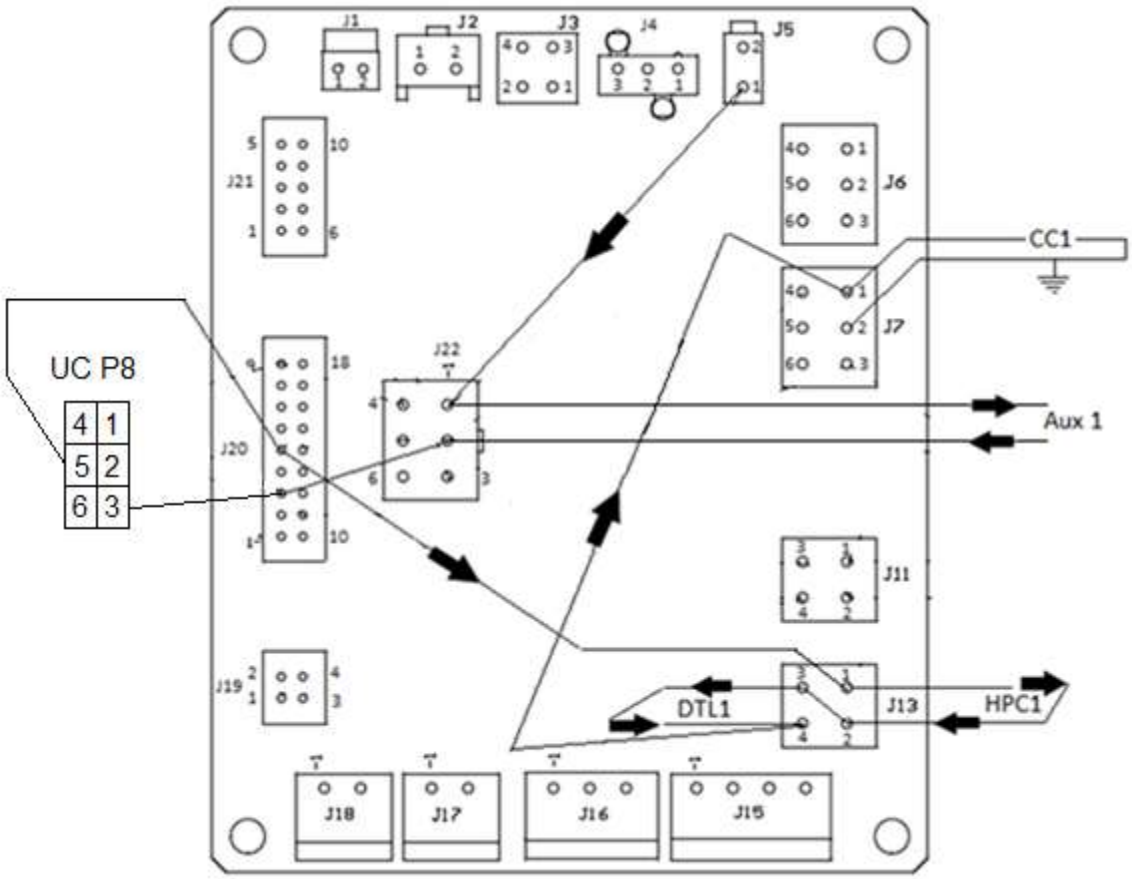

Circuit 2

Compressor 2 run command from UC P9-5 to Adapter Board J20-11.

Then to Adapter Board J11-1 by board trace.

Out to the HPC and back to Adapter Board J11-2.

Then to Adapter Board J11-3 by board trace.

Out to DTL and back to the Adapter Board J14-4.

Then to Adapter Board J7-3 by board trace, then out to CC2 coil.

The Proving Circuit is J5-1 to J22-3 through the Aux switch, to J22-4, to J20-9, then to UC P9-3.

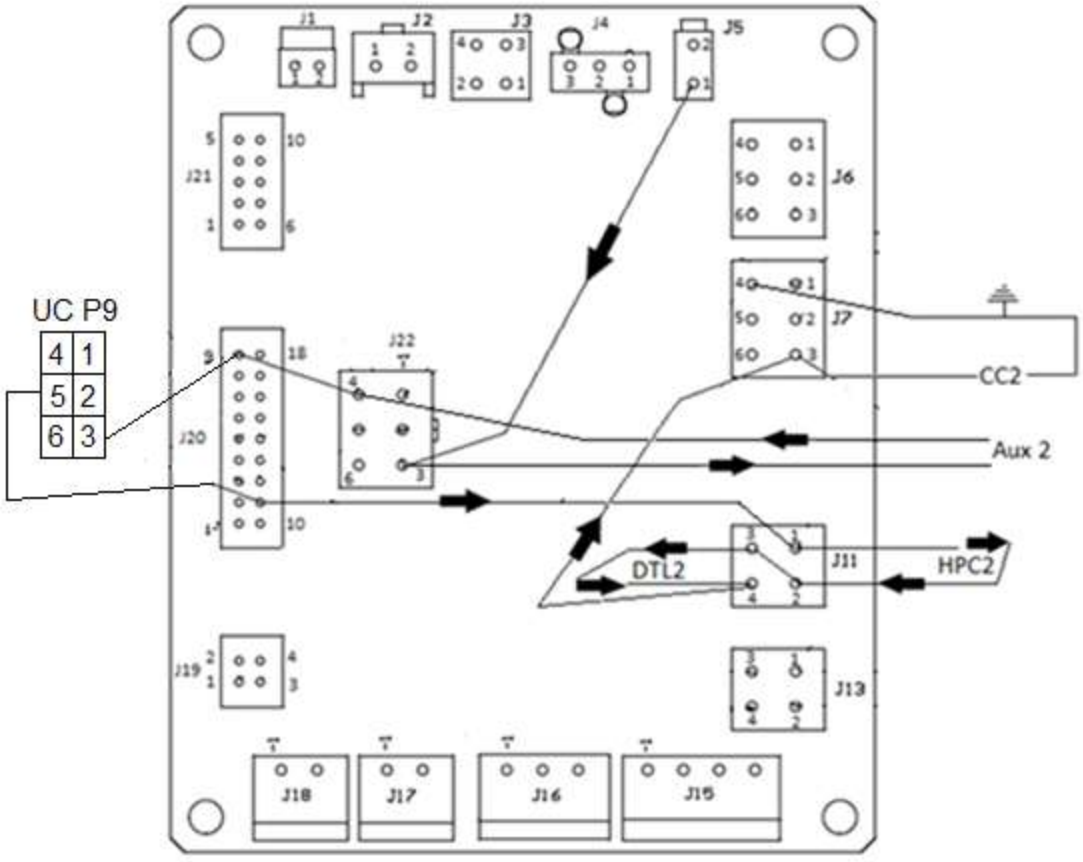

Compressor Control Circuit Troubleshooting Tips - *derived from bench testing*.

The black wire on the Compressor Contactor Aux Switch (from Adapter Board J22-1 for CC1, J22-3 for CC2) has 24 VAC any time the unit is powered up.

You can ohm out the contactor run circuits as follows:

Circuit 1 – UC P8-5 to ground.

Circuit 2 – UC P9-5 to ground.

Circuit 1

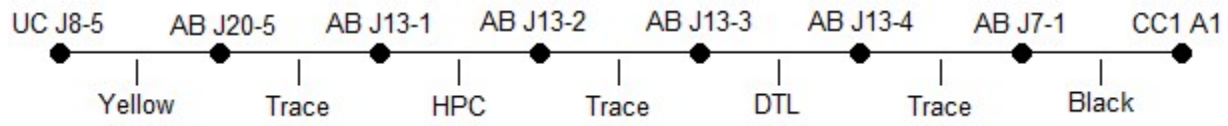

If the circuit is good you should read the contactor coil ohms.

Circuit 2

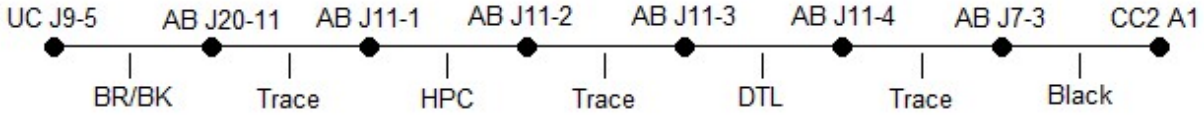

Method to give you more time to troubleshoot the circuit.

IMPORTANT! Unwire the line voltage from the compressor in question and isolate it when using this method!

Jump the Aux Switch

Have the Symbio Board turn on the circuit.

Within 7 seconds after LED 5 or LED 15 on the UC Board lights up, or the contactor pulls in, jump the aux switch C and NO terminals.

The Symbio 700 UC will keep the circuit energized while you check for 24 vac along the circuit.

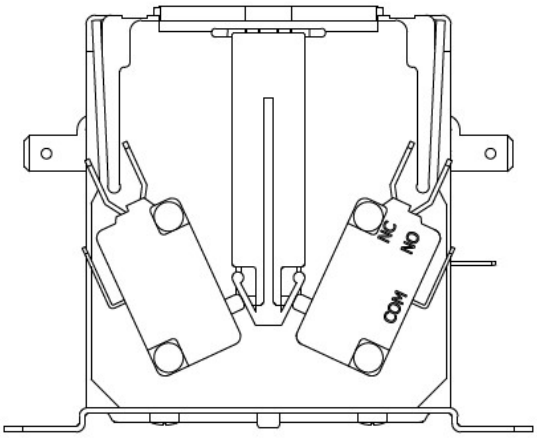

Proving Failure Scenarios:

The HPC or DTL opens while the compressor is running, (after the circuit has proved) and the Compressor Contactor loses its 24 VAC coil voltage, causing the Aux Switch to open.

Alarm - **Compressor Proving Trip Diagnostic – 15-minute lockout.**

The Symbio Board calls for the Compressor Contactor, and the Contactor doesn't pull in within 7 seconds.

Alarm - **Compressor Proving Lockout Diagnostic – INSTANT UNIT LOCKOUT!**

Possible causes:

The HPC and or the DTL are open, Contactor Coil open, Wiring error.

The Symbio Board calls for the Compressor Contactor, it pulls in and drops back out after 7 seconds.

Alarm - Compressor Proving Lockout Diagnostic – INSTANT UNIT LOCKOUT!

Possible causes:

No 24 VAC at black wire on the Aux Switch, Bad Aux Switch, Aux Switch is not on the contactor correctly.

The Compressor Contactor Aux Switch closes before it is supposed to.

Alarm - Compressor Contactor Fail Diagnostic – INSTANT UNIT LOCKOUT!

Possible causes:

The technician pushes in the contactor manually, Bad Aux Switch or Aux Switch wired wrong. (correct wiring is C and NO), Contactor welded shut.

Pressure switch / DTL specs.

R410A

LPC **–** Opens at 25 PSI, Closes at 41 PSI

HPC – Opens at 650 PSI Closes at 550 PSI

DTL – Opens at 230F, Closes at 180F

R22

LPC – Opens at 8 PSI, Closes at 25 PSI

HPC – Opens at 400 PSI, Closes at 250 PSI

DTL - Opens at 230F, Closes at 180F

The LPC appears to follow Reliatel Logic.

If the outdoor temperature is less than 40°F the LPC bypass delay will be set to 60 seconds.

When the outdoor temperature is between 40 to 49.9°F the delay will be set to 30 seconds.

For all outdoor temperatures 50°F and above, there will be no delay.

See the next page for the Official Sequence of Operation

Compressor Protection – (HPC, DTL or Aux switch proving trip)

Compressor protection operates similar to Reliatel-based solutions, with some minor changes/additions.

In most cases, action is taken on a per-circuit basis, but often we have protection devices per compressor.

Each compressor output will have a corresponding Compressor Proving input, which will be monitored to determine the state of the compressor contactor (via Auxiliary switch). Depending on the state of the contactor relative to the compressor output command, the following diagnostics will be generated:

Compressor "X" Proving Trip & Lockout

When a Compressor Output is Commanded ON, and it has been running for more than 5 seconds, if its associated Proving input OPENs:

All compressor outputs on the circuit will shut down immediately.

The "Compressor X Proving Trip" diagnostic point will be annunciated.

The Compressor's Proving Trip counter will be incremented.

The circuit will be disabled for 15 minutes.

After 15 minutes the circuit will attempt to restart

Two cases can cause a "Circuit X Proving Lockout" event:

If a circuit accumulates 4 "Compressor X Proving Trips" during the same compressor operating sequence (cooling, heating, etc.), a "Compressor X Proving Lockout" will be generated.

At compressor startup, if its associated proving input does not CLOSE within 5 seconds, a "Compressor X Proving Lockout" will be generated.

Once the "Lockout" has occurred the circuit will be locked out until a Diagnostic Reset is initiated

Compressor X Contactor Failure (Manual Reset)

If a Compressor Proving input becomes "Active" for 5 continuous seconds when the associated Compressor Command output is Inactive, a "Compressor X Contactor Failure" diagnostic will be generated; all compressors on the associated circuit will be de-energized immediately and they will be locked out and the "Compressor X Contactor Failure" diagnostic point will be activated.

Once the Contactor Failure has occurred the circuit will be locked out until a Diagnostic Reset is initiated.

Compressor Protection – Low Pressure Cutout Control

For each compressor/circuit, a Normally CLOSED low pressure cutout input will be monitored for equipment protection on the Symbio 700. When a low pressure event is active, the input will become OPEN and diagnostics will be generated as described below.

Prior to Compressor Startup:

If a compressor output is Off and its circuit's LPC input is open, compressor operation will not be inhibited. After compressor startup, the sequence described in the section below will be honored.

After Compressor Startup:

An LPC Bypass Delay function will delay the setting of a low pressure cutout after compressor startup on a circuit until a pre-determined amount of time passes in low ambient conditions. The length of the delay will be determined based on ambient temperature:

Outdoor Air Temperature Active < 40°F, the LPC Bypass Delay will be set to 60 seconds

50°F > Outdoor Air Temperature Active ≥ 40°F, the LPC Bypass Delay will be set to 30 seconds

Outdoor Air Temperature Active ≥ 50°F, the LPC Bypass Delay will be 0 seconds

After the LPC bypass timer has expired, following diagnostics will be generated based on the low pressure cutout inputs for the unit

Circuit X LPC Trip (Auto-Reset):

For Cooling Only Units or Heat Pumps in Active Cooling:

If a compressor low pressure cutout input opens:

All Compressor Outputs on the effected circuit will be immediately Commanded OFF.

The "Circuit X LPC Trip" diagnostic point will be annunciated.

The Circuit will be disabled for 3 minutes.

The Circuit's LPC trip count will be incremented.

After the 3 minute low pressure event timeout has expired, if the unit is not under a

Circuit Lockout" event:

The "Circuit X LPC Trip" diagnostic will be reset

If the cooling stage is still requested ON, the circuit will be allowed to stage again.

If the Circuit runs for 3 minutes, its LPC Trip Count will be reset to 0**.**

For Heat Pump Units in Active Mechanical Heating and Outdoor Air Temperature ≥ 0°F

If a compressor low pressure cutout input opens:

All Compressor Outputs on the effected circuit will be immediately Commanded OFF.

The “Circuit X LPC Trip” diagnostic point will be annunciated.

The Circuit will be disabled for 3 minutes.

The Circuit’s LPC trip count will be incremented.

On Heat Pumps, if the Outdoor Air Temperature is < 0°F or if the unit is in active Defrost, the low pressure cutout diagnostic is ignored. This is to allow a heat pump to continue to provide heating capacity at low ambient conditions.

After the 3 minute low pressure event timeout has expired, if the unit is not under a “Circuit Lockout” event:

The “Circuit X LPC Trip” diagnostic will be reset

If the cooling stage is still requested ON, the circuit will be allowed to stage again.

If the Circuit runs for 3 minutes, its LPC Trip Count will be reset to 0.

Circuit “X” Low Pressure Lockout (Manual Reset)

If a compressor/circuit accumulates 4 “Circuit X Low Pressure Trips” without the circuit running for the 3-minute minimum on time (counter is not reset), a “Circuit X LPC Lockout” will be generated.

Once the lockout is generated the circuit will be locked out until a Diagnostic Reset is initiated.

Odyssey Relay Board

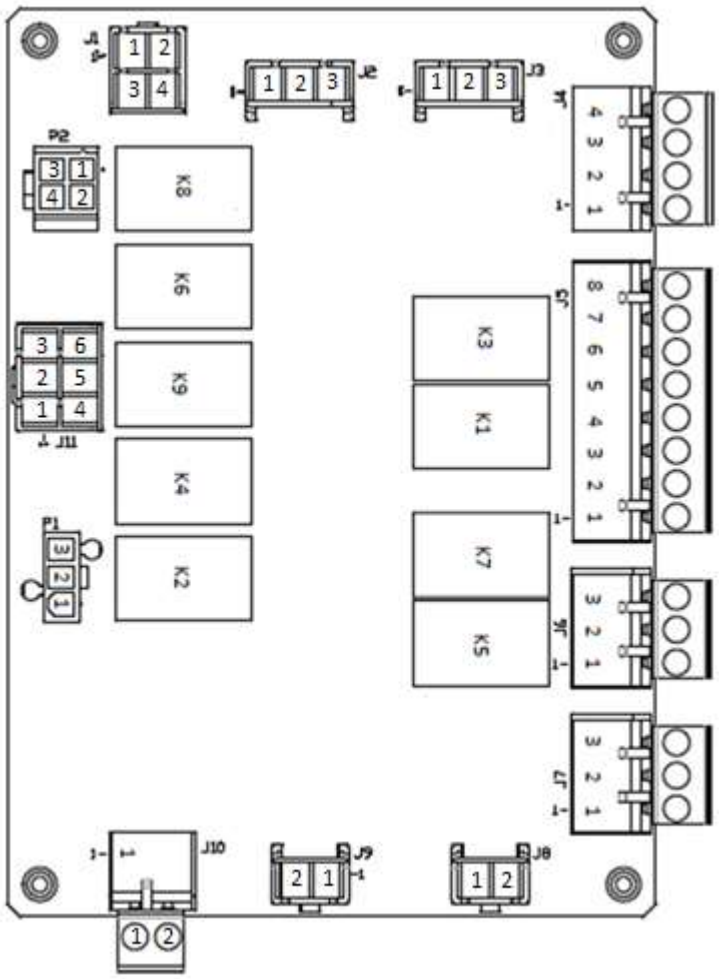

Electrical Integration board for Odyssey Air Handlers

Includes a set of connectors as well as onboard relay logic to manage variation associated with various air-handler/condenser pairing solutions.

Board includes no microcontroller – hardware-based solution only

Eliminates complex harnesses and variation for end devices in the Odyssey air handler

Included in all Odyssey Symbio Air Handlers

Note: J5-2 is current limited to 300ma.

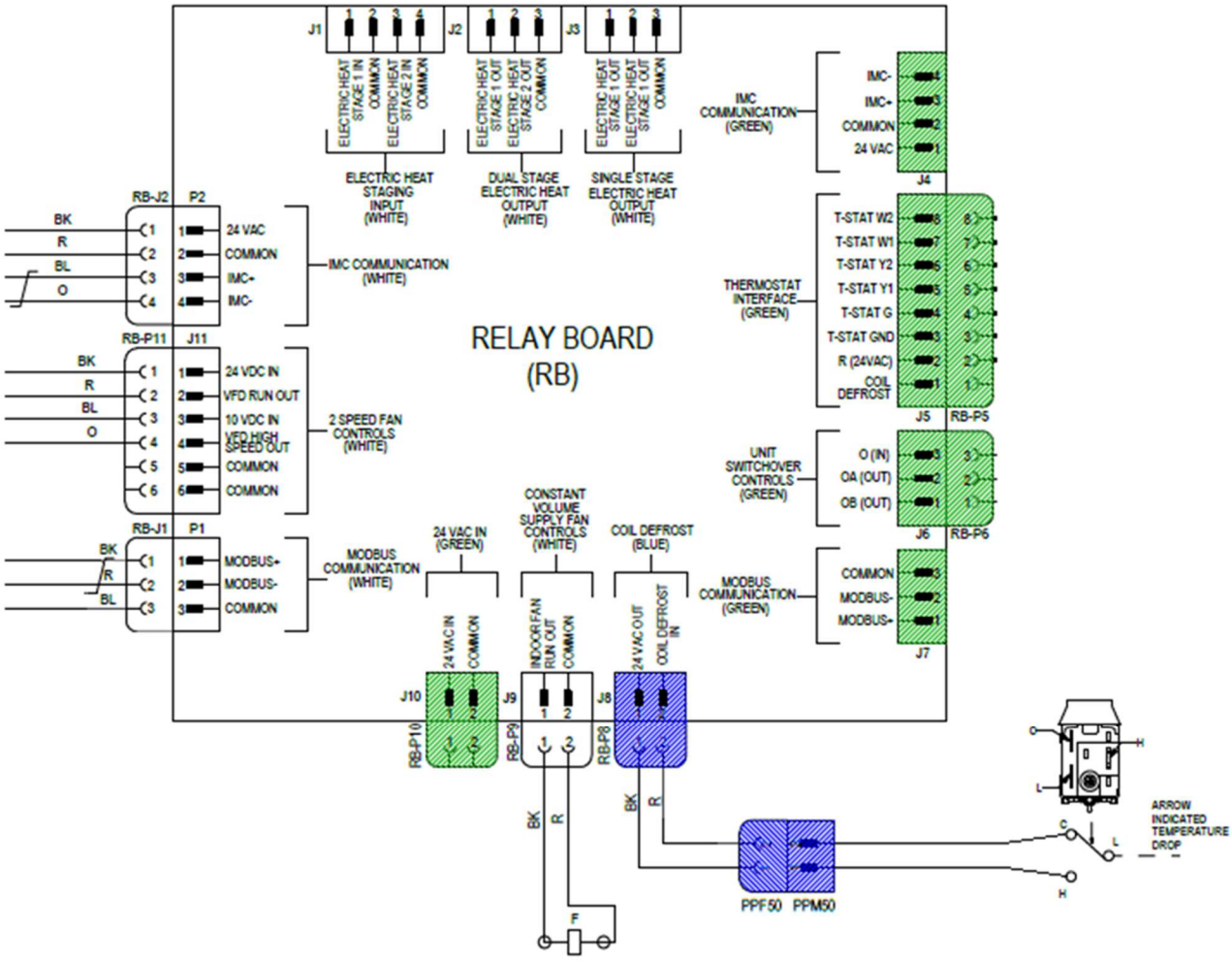

The Symbio Air Handler EDC Switch part number is CNT08144. (this switch is Demand Limit in the menu)

Switch is shipped in the Normally Open configuration, for Pairing with Electromechanical or Reliatel Condenser, move wire from terminal “H” to terminal “L” on EDC Switch.

H-C – Device contacts CLOSE when temperature falls below 25F, OPEN when temperature rises above 60F.

L-C – Device contacts OPEN when temperature falls below 25F, CLOSE when temperature rises above 60F.

P1 is used will be on Air Handlers when Digit 15 in the Model Number is D.

J5

J5-1 connects to J8-2 by a trace in the circuit board.

J5-2 is current limited to 300ma, Tech Support recommends not using this terminal for anything at this time. Use J10-1 instead.

24 VAC to J5-4 closes J11-1 to 2 and is the fan interlock to allow heat to work.

24 VAC to J5-5 does absolutely nothing.

24 VAC to J5-6 closes J11-3 to 4.

J5-7 connects to J1-1 by a trace in the circuit board.

J5-8 connects to J1-3 by a trace in the circuit board.

J6 - Some of the wiring diagrams are wrong for J6.

The diagram should be, J6-1 OUT to Unit B, J6-2 OUT to Unit A, J6-3 24 VAC IN.

When 24 VAC is applied to J6-3, the K5 and K7 relay will close outputting 24 volts from J6-1 and 2.

P9 is used on Air Handlers when Digit 15 in the Model Number is 1.

J11 is used on Air Handlers when Digit 15 in the Model Number is C.

Odyssey Options Board – BAYMODU001

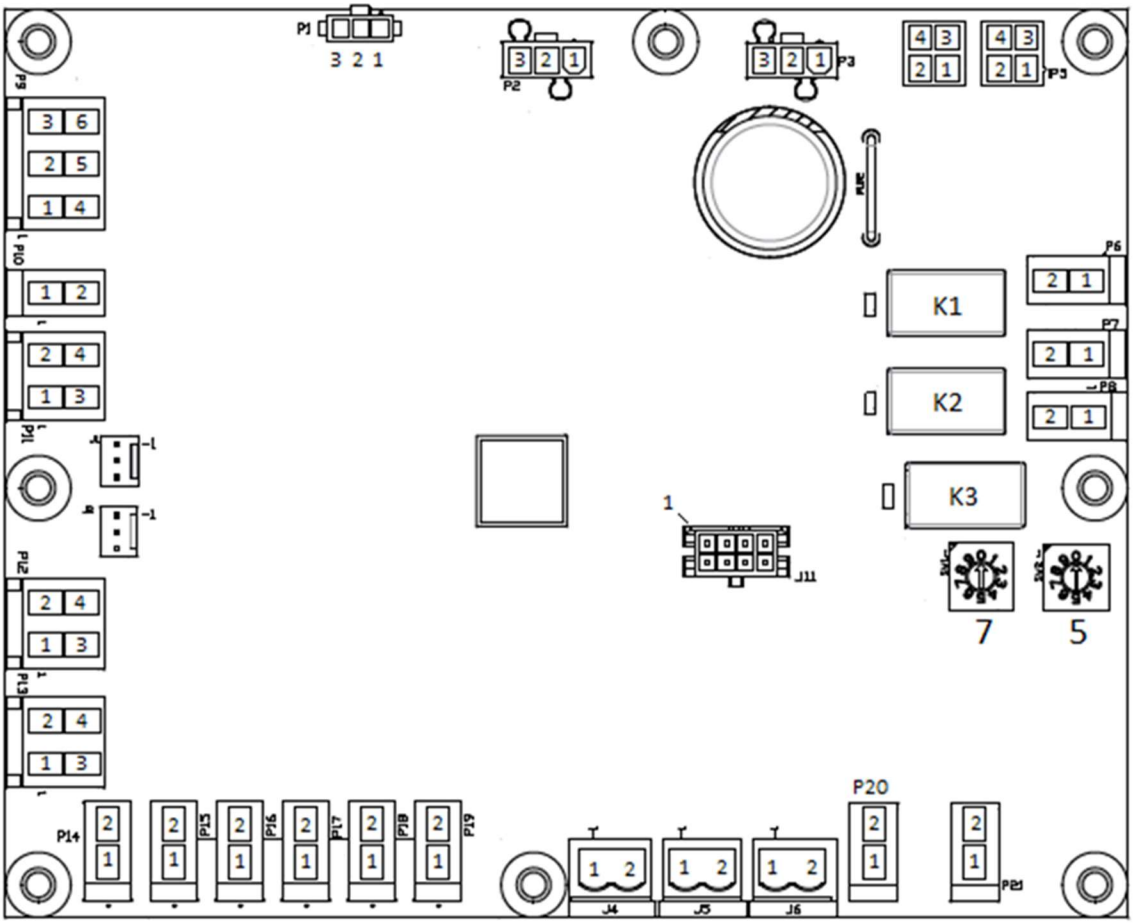

Optional expansion IO module.

Multiple instances can be installed with unique addresses, but only the Indoor Options Board is supported for Odyssey at launch.

Required for SZVAV/Multi-Speed Symbio Air Handlers and Electric Heat systems when paired with a Symbio ODU.

Included/added in Odyssey AHU's.

Indoor Options Module Factory Connections

Factory Connections	Function	Pin #	Signal
P4	IMC Communication	1	24VAC In/Out
		2	GND
		3	IMC +
		4	IMC -
P5	IMC Communication	1	24VAC In/Out
		2	GND
		3	IMC +
		4	IMC -
P6	Electric Heat Stage 1	1	Electric Heat Stage 1 Output
		2	GND
P7	Electric Heat Stage 2	1	Electric Heat Stage 2 Output
		2	GND
P14	Discharge Air Temp	1	Discharge Air Temperature Input
		2	GND
P16	FroStat	1	24Vac Out
		2	FroStat Input
SW1	Module Address	NA	NA
SW2	Module Address	NA	NA

Symbio™ Options Module(BAYMODU001)

*Required for Electric Heat

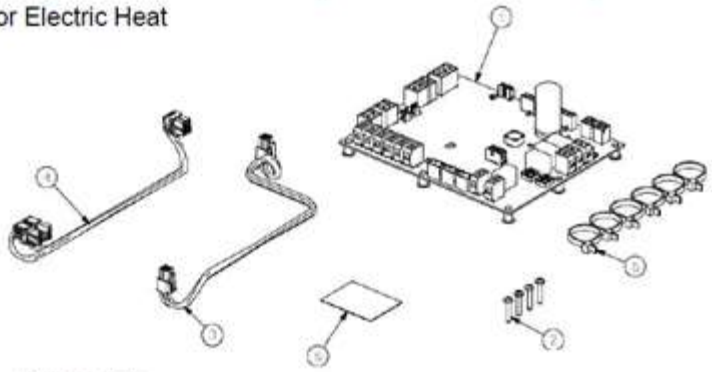

1. Options module
2. Screws (4)
3. Harness IMC Communication
4. Harness, Electric Heat Controls
5. Wire ties
6. Information Label

BAYMODU001A		1	ACCESSORY; SYMBIO OPTIONS MODULE	
MOD03102		1	MODULE; SYMBIO, OPTIONS	
WIR010118		1	WIRE; HARNESS, IMC COMMUNICATION, 15 IN, UC-J4 (4 PIN) TO AB-P3 (4 PIN)	
WIR10355		1	WIRE; HARNESS; ELECTRIC HEAT CONTROLS, OPTIONS MODULE	

An Options Module requires shielded twisted pair communication wire between the Condenser Adapter Board J15-3 & 4 and the Air Handler Relay Board J4-3 & 4.

Indoor Options Module Communication Troubleshooting

Options Board com voltage is 4.5 to 3.25 VDC, pulsing 30 times a minute.

Measuring at Options Board or downstream of the problem:

IMC - open

(IMC + to IMC -) 4.2 VDC to 3.6 VDC.

(IMC + to Ground) 4.7 VDC to 4.3 VDC.

(IMC – to Ground) .49 VDC to .47 VDC.

IMC + open

(IMC + to IMC -) .7 VDC to .3 VDC.

(IMC + to Ground) .97 VDC to 87 VDC.

(IMC – to Ground) .91 VDC to .1 VDC.

Wires Crossed

(IMC + to IMC -) -4.7 VDC to -.3 VDC.

(IMC + to Ground) .75 VDC to .1 VDC.

(IMC – to Ground) 4.7 VDC to 4.2 VDC.

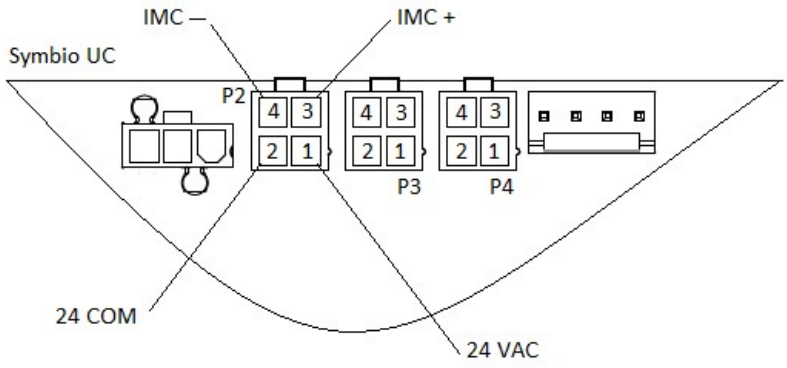

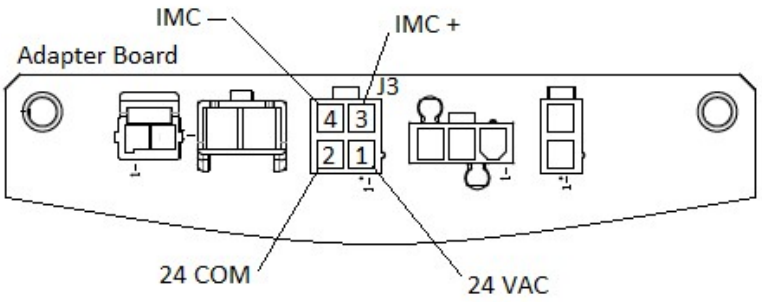
IMC —
IMC +
Adapter Board
J3
4 3
2 1
24 COM
24 VAC

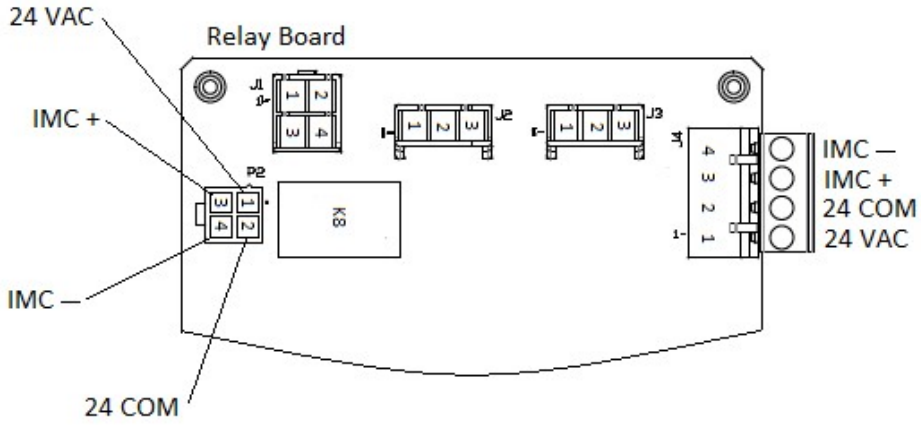
24 VAC
Relay Board
IMC +
IMC —
24 COM
IMC —
IMC +
24 COM
24 VAC

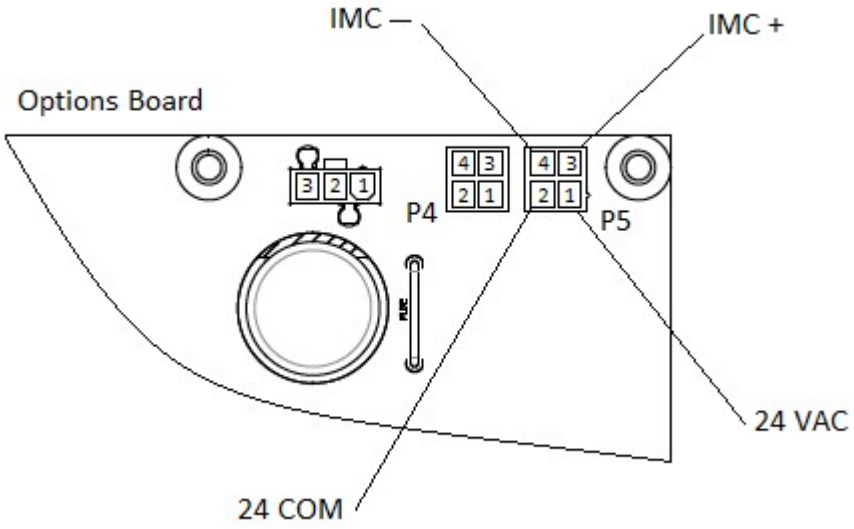
IMC —
IMC +
Options Board
P4
P5
24 VAC
24 COM

Adding Electric Heat to a Symbio Air Handler paired with a Symbio Condenser

Set the Options Board address to **75.**

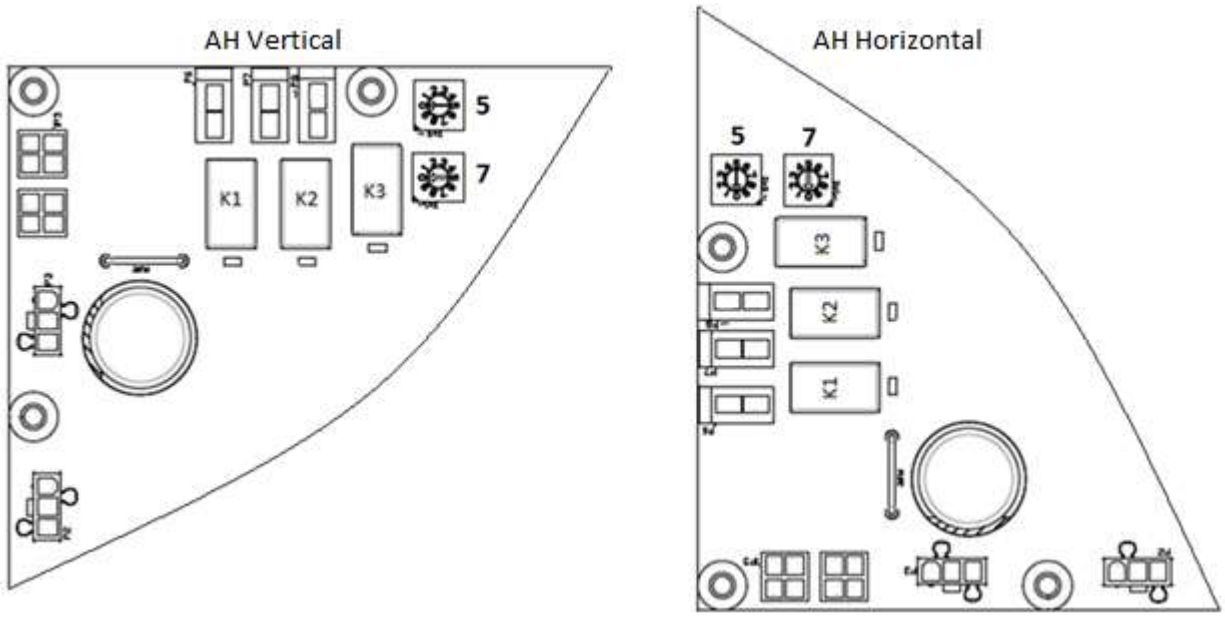

Power up.

Add Electric Heat in the Symbio 700 Configuration by using one of the methods below.

Using the On-Board menu

Go to Home, Utilities, Edit Configuration, Primary Heat for TTA's, Secondary Heat for TWA's.

Using the Phone App

Go to Settings View Configuration, EDIT, Primary Heat for TTA's, Secondary Heat for TWA's.

If the Options Board was powered up before setting the address, do an IMC Reset with the Phone App.

Go to Tools Service, IMC Link Reset

Electric Heat Adapter Harnesses

43675836 – Symbio Adapter Harness (WIR10632)

43675837 – Legacy Adapter Harness (WIR10690)

If you have a Symbio Condenser Paired with a Legacy Air Handler, don't set up the Symbio UI for electric heat because you will get an Options Board Comm Fail.

The Relay Board, (which would be in a Symbio 2-Speed Air Handler designed to be paired with a EM Condenser) has a fan interlock built in for electric heat, if you give it 24 vac on J5-7 only, the heat relay clicks but there is no 24 vac output from J3-1, if you give it a G (J5-4) + W1 (J5-7) you get 24 vac out of J3-1.

Two status LEDS will light up on the Options Board if there is a request for electric heat from the Symbio 700 UC, K1 is 1st stage, K2 is 2nd stage.

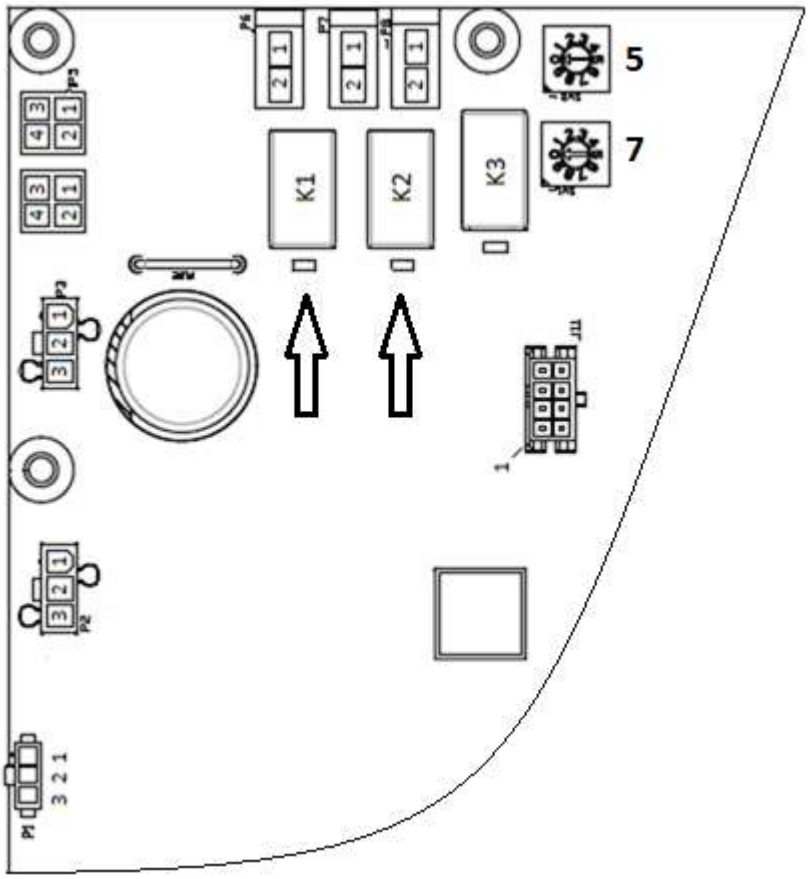

Phase Monitor

Phase monitors are installed on all 5 to 25 ton products with three-phase power.

The main purpose of the phase monitor is to ensure that the scroll compressors are rotating in the proper direction.

A green LED on the phase monitor indicates proper phasing.

If the input leads are crossed, the phase monitor will sense this and will immediately shut the unit down.

The monitor will illuminate a red LED indicating a phase reversal condition.

If the control wires are crossed on the Y and Y-out terminals on the phase monitor, this will also cause the red LED to illuminate and will not allow the unit to run.

If a red LED is displayed, swap two leads on the incoming power to the unit.

If the red LED is still illuminated, check for proper control wiring connections to the phase monitor.

If all wiring is correct, the phase monitor is defective and needs to be replaced.

Note: A field wiring error on AB J15 will sometimes cause a Phase Monitor fault on the Symbio Board, even though the Phase Monitor LED is Green.

VOLTAGE	PHASE IMBALANCE TRIP POINT
600 VAC	2-6%
440 VAC	6-9%
208 VAC	11-15%

Phase Monitor Wire Connections

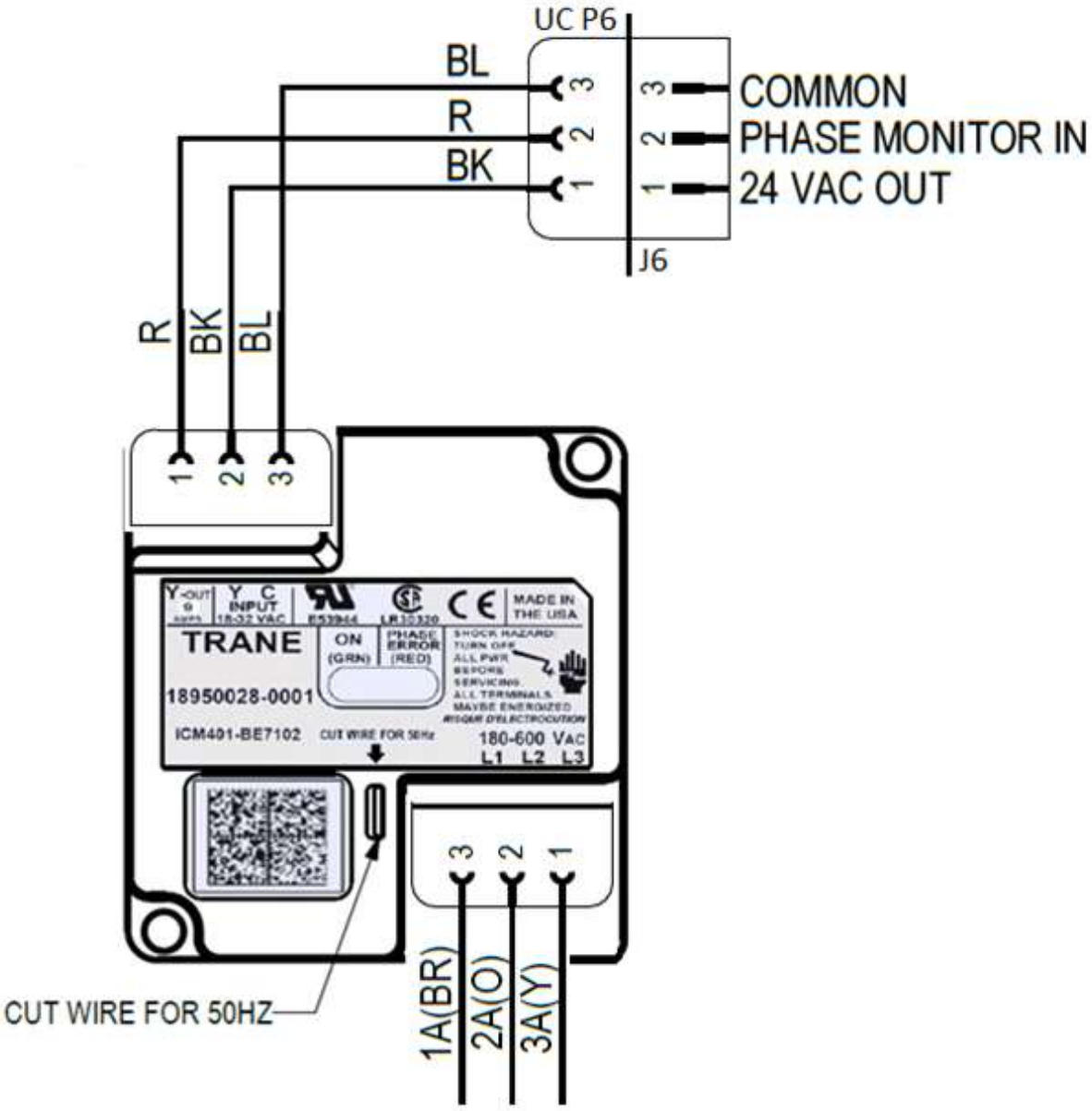

Emergency Stop

Connect a **Normally Open** field supplied control device to the Symbio 700 (UC) J18-1 & 2.

Unit will shut down when switch is closed.

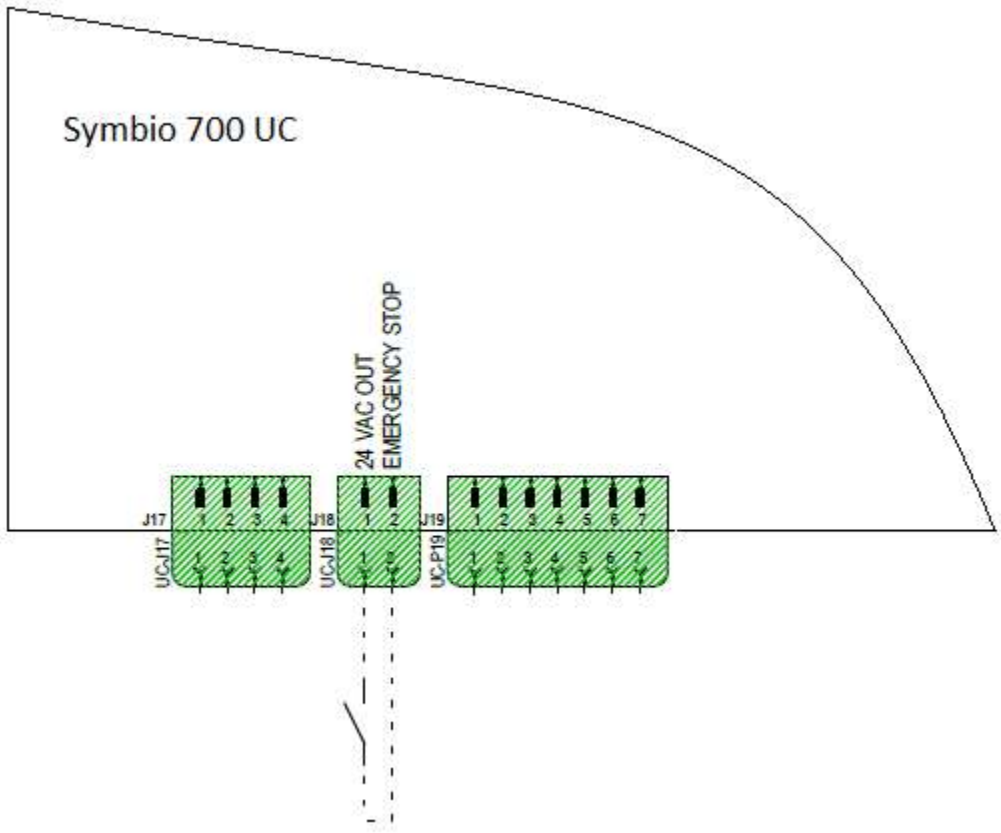

Supply Air Tempering

Supply Air Tempering Operation

Unit must have an Indoor Options Board and a Discharge Air Sensor installed.

If the Supply Air Tempering function is configured and the Discharge Air Temperature local sensor is valid, the Space Temperature Control algorithm manages the Supply Air Tempering function to prevent excessively cold discharge air from being supplied from the unit. The sequence for VVZT systems are consistent with CVZT systems, utilizing single-speed, and full airflow operation.

Supply Air Tempering is not applicable when a Conventional TStat is configured as the Space Controller.

The following requirements must be met to allow Supply Air Tempering on a Staged Heat unit:
- The supply fan is ON.
- The unit is in Occupied mode.
- The unit is in any heating mode, including Heat, Emergency Heat, Morning Warmup, Max Heat but is not actively heating OR
- The unit is in any cooling mode except night purge, but not actively cooling and cooling capacity has been OFF for 5 minutes.

If the discharge air temperature drops to the Discharge Air Temperature Minimum Cool Limit - Active and the Space Temperature is less than the Active Space Temp Cooling Setpoint Status – 0.5°F and if there are no stages of heat on, the Supply Air Tempering function will bring ON one stage of available staged auxiliary heat.

Note: *Heat Pump units will energize 1 stage of auxiliary Heat in order to meet the Supply Air Tempering request; compressor-based heating will not be used to satisfy Supply Air Tempering.*

Once Supply Air Tempering is active, the stage of heat will be turned OFF if the Discharge Air Temperature rises to 10°F ABOVE the Discharge Air Temperature Minimum Cool Limit - Active, or the Space Temperature rises to the Space Temp Cooling Setpoint Status. Additionally, if the Space Heat Control function determines that 1 or more stages of Heat are required to meet the Space Temp Heating Setpoint Status, Tempering will be discontinued, and the unit will stage heating to meet the current space demand.

Heat Pump Heating Lockout

On Heat Pump systems, the user will be able to select a Heat Pump Heating Lockout Setpoint to determine a low outside air temperature limit for heat pump heating operation.

There is no enable/disable switch for this function. By default, the Heat Pump Heating Lockout Setpoint will be set to -40F, which essentially disables this function. If a user wants to take advantage of this feature, the recommendation will be to raise the Heat Pump Heating Lockout Setpoint to an appropriate lockout point for the application.

The function operates as follows:

When the Outdoor Air Temperature Active ≤ Heat Pump Heating Lockout Setpoint – Active:

Compressor outputs for heating will be disabled after the minimum ON time has expired. Auxiliary Heating, if configured, will be used to satisfy a heating demand.

If compressors were not ON before this function became active, compressors will be prevented from operating for heating operation.

Auxiliary Heating, if configured, will be used to satisfy a heating demand

When the Outdoor Air Temperature Active > Heat Pump Heating Lockout Setpoint – Active + 5F:

Compressor Outputs for heating will be re-enabled for heating operation

Auxiliary Heating, if configured, will be allowed to de-energize or remain energized in order to satisfy the current heating demand.

When the Outdoor Air Temperature Active point is in Alarm:

The Heat Pump Heating Lockout function will be disabled.

Compressor Outputs, if available, will be used to satisfy heating demands.

Symbio 700 Demand Defrost Operation - *derived from bench testing*

First Defrost permit conditions after Power Up.

30 minutes run time with the Outdoor Air Temp less than 52° and the Outdoor Coil Temp less than 33°.

Subsequent Defrosts permit conditions.

Outdoor Air Temp less than 52°, Outdoor Coil Temp less than 33°, The **New Initiate DT Value** is reached.

To view the sensor temperatures using the Symbio 700 On-Board User Interface

Press **Home**, Down Arrow to **Status**

Press the Check Mark, then Down Arrow to **System** (for outdoor temp) or **Refrigeration** (for coil temp)

Press the Check Mark, then Down Arrow to "Outdoor Air Temperature Arbitrator" or "Coil Temperature Sensor".

Sequence of Operation

The first defrost after a power cycle will occur after 30 minutes of run time under defrost permit conditions.

When the first defrost cycle has terminated, the board will track twelve (12) minutes to assure that a dry coil condition has been achieved.

At the twelve-minute point, a Dry Coil Temperature Differential **(DCTD)** will be calculated using the current values of OAT (outdoor air temp) minus OCT (outdoor coil temp).

Note: *The OAT is expected to be higher than the OCT.*

The **(DCTD)** value is then multiplied by 1.8 to calculate the **New Initiate DT Value**.

Once the **New Initiate DT Value** is reached, the next defrost cycle is initiated.

Defrost Termination

The defrost cycle is terminated when the Outdoor Coil Temperature (OCT) exceeds the Outdoor Temperature (ODT) +47°F.

The defrost termination temperature (DTT) will be limited between 57°F and 72°F.

Defrost Cycle Example

12 minutes after exiting the first defrost cycle (after power-up) the OD Air temperature is 40° and the OD coil temperature is 30° (a 10° differential).

When the differential reaches 18° (10° X 1.8) the next defrost cycle should begin.

The unit runs for 45 minutes at OD Air temperature 40° and OD Coil temperature 30° without initiating defrost. *(this is correct operation because the OD Air to OD Coil differential is not 18°)*

Lowered the OD coil temp. to 22° and defrost initiated. (40° OD Air - 22° OD Coil = 18° differential)

Raised the OD coil temp. to 72° and unit exited defrost. (40° + 47° limited to 72°)

Readjusted the OD Air temperature to 40° and the OD Coil temperature to 30° so the board would again see a 10° differential 12 minutes after exiting defrost.

15 minutes after the previous defrost ended raised the OD Air temperature to 48° and defrost initiated. (48° OD Air – 30° OD Coil = 18° differential)

Independent Circuit Defrost Operation

Applies to Odyssey Independent Circuit Heat Pump units with two outdoor coil temperature sensors.

The unit will perform defrost per circuit based on its own coil temperature sensor value, the outdoor ambient temperature, and the accumulated circuit run time.

A stage of auxiliary heat will be energized anytime either circuit is in defrost mode.

All other defrost functionality, including the diagnostic conditions, will perform as described above independently per circuit.

Default Mode

If any Defrost Fault is active, the unit will revert to the default mode any time the unit is in the active heat mode with compressors running.

If **Both** the Outdoor Air Sensor and the Coil Temperature Sensor fails, the unit will revert to the default mode any time the unit is in the active heat mode with compressors running.

If **Either** the Outdoor Air Sensor or the Coil Temperature Sensor fails, the unit will revert to the default mode if the other sensor is below the Defrost Permit Temperature.

Default Mode is 5-minute defrost cycle after each 30 minutes of cumulative compressor heating operation.

Below is the Official Sequence of Operation

Condenser Defrost (Heat Pumps Only)

Demand Defrost Control

The Symbio 700 Demand Defrost sequence matches the sequence on Reliatel controls, with the exception of changes in diagnostic names:

Outdoor coil defrosting occurs only when operating in heating mode with outdoor ambient temperature below 52°F and the outdoor coil temperature below 33°F.The first defrost cycle after power-up is initiated based on operating time at the required conditions. Shortly after completion of the defrost cycle, the temperature difference between the outdoor coil and outdoor air is calculated and is used as an indicator of unit performance at dry coil conditions.

Over time, as moisture and frost accumulate on the coil, the coil temperature will drop, increasing the temperature difference. When the temperature difference reaches 1.8 times the dry coil temperature differential (ΔT), a defrost cycle is initiated. While defrosting, the switchover valve is in the cooling position, outdoor fans are off, and the compressors continue to operate.

The defrost cycle is terminated when the coil temperature rises high enough to indicate that the frost has been eliminated. Termination of the defrost cycle includes a “soft start” delay. At the end of each defrost cycle, the outdoor fan comes on 5 seconds before the switchover valve is de-energized. This reduces stress on the compressor and makes for a quieter defrost.

During the defrost cycle, a stage of auxiliary heat is turned ON if not already operating.

The defrost cycle is terminated based on the termination temperature calculation using the outdoor temperature (OAT) +47°F. The defrost termination temperature (DTT) will be limited between 57°F and 72°F.

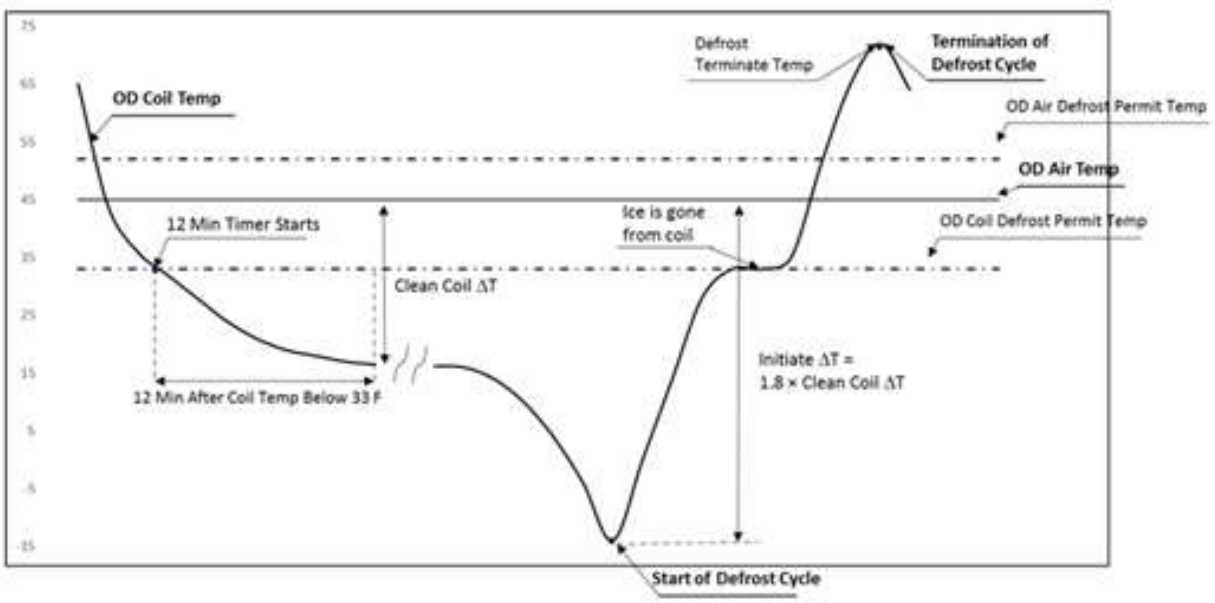

Demand Defrost Status Points
Circuit 1 Defrost Status
Circuit 2 Defrost Status
Defrost Status
Diagnostic: Demand Defrost Disable
Diagnostic: Demand Defrost Disable Ckt 1
Diagnostic: Demand Defrost Disable Ckt 2
Diagnostic: Demand Defrost Fault A Ckt 1
Diagnostic: Demand Defrost Fault A Ckt 2
Diagnostic: Demand Defrost Fault A
Diagnostic: Demand Defrost Fault B Ckt 1
Diagnostic: Demand Defrost Fault B Ckt 2
Diagnostic: Demand Defrost Fault B
Diagnostic: Demand Defrost Fault C Ckt 1
Diagnostic: Demand Defrost Fault C Ckt 2
Diagnostic: Demand Defrost Fault C
Diagnostic: Demand Defrost Fault D

- Defrost Status will be set to active on all units, when any circuit is in Active Defrost.
- Circuit 1 Defrost Status will be set to active only when the unit has more than one refrigeration circuit, circuit 1 is independent circuit and is in Active Defrost.
- Circuit 2 Defrost Status will be set to active only when the unit has more than one refrigeration circuit, circuit 2 is independent circuit and is in Active Defrost.
- Refer to the Application guide for more detail about Demand Defrost Diagnostics.

Temperature Sensors (NTC)

F	°C	(K ohms)	DCV
200	93.33	345.684	Open
-39	-39.44	333.237	2.426
-38	-38.89	321.274	2.423
-37	-38.33	309.777	2.420
-36	-37.78	298.724	2.417
-35	-37.22	288.097	2.414
-34	-36.67	277.879	2.412
-33	-36.11	268.053	2.408
-32	-35.56	258.603	2.405
-31	-35.00	249.523	2.402
-30	-34.44	240.81	2.399
-29	-33.89	232.425	2.395
-28	-33.33	224.355	2.392
-27	-32.78	216.59	2.388
-26	-32.22	209.114	2.384
-25	-31.67	201.918	2.380
-24	-31.11	194.991	2.376
-23	-30.56	188.32	2.372
-22	-30.00	181.904	2.368
-21	-29.44	175.738	2.364
-20	-28.89	169.798	2.359
-19	-28.33	164.076	2.355
-18	-27.78	158.562	2.350
-17	-27.22	153.248	2.345
-16	-26.67	148.127	2.340
-15	-26.11	143.192	2.335
-14	-25.56	138.435	2.330
-12	-24.44	129.449	2.319
-11	-23.89	125.199	2.314
-10	-23.33	121.1	2.308
-9	-22.78	117.146	2.302
-8	-22.22	113.331	2.296
-7	-21.67	109.652	2.290
-6	-21.11	106.102	2.283
-5	-20.56	102.676	2.277
-4	-20.00	99.377	2.270
-3	-19.44	96.197	2.263
-2	-18.89	93.127	2.256
-1	-18.33	90.163	2.249
0	-17.78	87.301	2.242

F	°C	(K ohms)	DCV
1	-17.22	84.537	2.234
2	-16.67	81.868	2.227
3	-16.11	79.291	2.219
4	-15.56	76.802	2.211
5	-15.00	74.403	2.202
6	-14.44	72.087	2.194
7	-13.89	69.849	2.186
8	-13.33	67.687	2.177
9	-12.78	65.597	2.168
10	-12.22	63.577	2.159
11	-11.67	61.624	2.150
12	-11.11	59.737	2.140
13	-10.56	57.913	2.131
14	-10.00	56.153	2.121
15	-9.44	54.452	2.111
16	-8.89	52.807	2.101
17	-8.33	51.216	2.090
18	-7.78	49.677	2.080
19	-7.22	48.188	2.069
20	-6.67	46.748	2.058
21	-6.11	45.354	2.047
22	-5.56	44.007	2.036
23	-5.00	42.705	2.025
24	-4.44	41.446	2.013
25	-3.89	40.226	2.001
26	-3.33	39.046	1.989
27	-2.78	37.904	1.977
28	-2.22	36.797	1.965
29	-1.67	35.726	1.952
30	-1.11	34.689	1.940
31	-0.56	33.686	1.927
32	0.00	32.72	1.914
33	0.56	31.797	1.901
34	1.11	30.903	1.888
35	1.67	30.037	1.875
36	2.22	29.198	1.861
37	2.78	28.386	1.848
38	3.33	27.599	1.834
39	3.89	26.836	1.821
40	4.44	26.097	1.807
41	5.00	25.383	1.793

°F	°C	(K ohms)	DCV
42	5.56	24.69	1.779
43	6.11	24.018	1.764
44	6.67	23.367	1.750
45	7.22	22.736	1.736
46	7.78	22.123	1.721
47	8.33	21.53	1.706
48	8.89	20.953	1.692
49	9.44	20.396	1.677
50	10.00	19.854	1.662
51	10.56	19.33	1.647
52	11.11	18.821	1.632
53	11.67	18.327	1.617
54	12.22	17.847	1.602
55	12.78	17.382	1.587
56	13.33	16.93	1.571
57	13.89	16.491	1.556
58	14.44	16.066	1.540
59	15.00	15.654	1.525
60	15.56	15.253	1.510
61	16.11	14.864	1.494
62	16.67	14.486	1.479
63	17.22	14.119	1.463
64	17.78	13.762	1.448
65	18.33	13.416	1.432
66	18.89	13.078	1.416
67	19.44	12.752	1.401
68	20.00	12.435	1.385
69	20.56	12.126	1.370
70	21.11	11.827	1.354
71	21.67	11.535	1.339
72	22.22	11.252	1.323
73	22.78	10.977	1.308
74	23.33	10.709	1.293
75	23.89	10.448	1.277
76	24.44	10.194	1.262
77	25.00	9.949	1.247
78	25.56	9.71	1.231
79	26.11	9.477	1.216
80	26.67	9.25	1.201

°F	°C	(K ohms)	DCV
81	27.22	9.03	1.186
82	27.78	8.815	1.171
83	28.33	8.607	1.156
84	28.89	8.404	1.142
85	29.44	8.206	1.127
86	30.00	8.014	1.112
87	30.56	7.827	1.098
88	31.11	7.645	1.083
89	31.67	7.468	1.069
90	32.22	7.295	1.055
91	32.78	7.127	1.040
92	33.33	6.963	1.026
93	33.89	6.803	1.012
94	34.44	6.648	0.998
95	35.00	6.497	0.985
96	35.56	6.35	0.971
97	36.11	6.207	0.958
98	36.67	6.067	0.944
99	37.22	5.931	0.931
100	37.78	5.798	0.918
101	38.33	5.668	0.905
102	38.89	5.543	0.892
103	39.44	5.42	0.879
104	40.00	5.3	0.866
105	40.56	5.184	0.854
106	41.11	5.07	0.841
107	41.67	4.959	0.829
108	42.22	4.851	0.817
109	42.78	4.745	0.805
110	43.33	4.642	0.793
111	43.89	4.542	0.781
112	44.44	4.444	0.770
113	45.00	4.349	0.758
114	45.56	4.256	0.747
115	46.11	4.165	0.735
116	46.67	4.076	0.724
117	47.22	3.99	0.713
118	47.78	3.906	0.703
119	48.33	3.824	0.692

°F	°C	(K ohms)	DCV
120	48.89	3.743	0.681
121	49.44	3.665	0.671
122	50.00	3.589	0.661
123	50.56	3.514	0.651
124	51.11	3.442	0.641
125	51.67	3.371	0.631
126	52.22	3.302	0.621
127	52.78	3.234	0.611
128	53.33	3.169	0.602
129	53.89	3.104	0.593
130	54.44	3.041	0.583
131	55.00	2.98	0.574
132	55.56	2.919	0.565
133	56.11	2.861	0.557
134	56.67	2.804	0.548
135	57.22	2.748	0.539
136	57.78	2.693	0.531
137	58.33	2.64	0.523
138	58.89	2.587	0.514
139	59.44	2.536	0.506
140	60.00	2.486	0.498
141	60.56	2.438	0.491
142	61.11	2.39	0.483
143	61.67	2.343	0.475
144	62.22	2.298	0.468
145	62.78	2.253	0.460
146	63.33	2.21	0.453
147	63.89	2.167	0.446
148	64.44	2.125	0.439
149	65.00	2.085	0.432
150	65.56	2.044	0.425
151	66.11	2.006	0.418
152	66.67	1.967	0.412
153	67.22	1.93	0.405
154	67.78	1.894	0.399
155	68.33	1.859	0.392
156	68.89	1.823	0.386
157	69.44	1.789	0.380
158	70.00	1.756	0.374
159	70.56	1.723	0.368
160	71.11	1.691	0.362
161	71.67	1.659	0.356
162	72.22	1.629	0.351
163	72.78	1.599	0.345
164	73.33	1.57	0.344
165	73.89	1.541	0.340
166	74.44	1.512	0.329
167	75.00	1.485	0.324
168	75.56	1.458	0.319
169	76.11	1.432	0.314
170	76.67	1.406	0.309
171	77.22	1.38	0.304
172	77.78	1.356	0.299
173	78.33	1.331	0.294
174	78.89	1.308	0.290
175	79.44	1.284	0.285
176	80.00	1.261	0.281
177	80.56	1.239	0.276
178	81.11	1.217	0.272
179	81.67	1.196	0.268
180	82.22	1.174	0.263
181	82.78	1.154	0.259
182	83.33	1.133	0.255
183	83.89	1.113	0.251
184	84.44	1.094	0.247
185	85.00	1.076	0.244
186	85.56	1.057	0.240
187	86.11	1.038	0.236
188	86.67	1.02	0.232
189	87.22	1.003	0.229
190	87.78	0.986	0.225
191	88.33	0.969	0.222
192	88.89	0.952	0.218
193	89.44	0.937	0.215
194	90.00	0.92	0.211
195	90.56	0.905	0.208
196	91.11	0.89	0.205
197	91.67	0.875	0.202
198	92.22	0.86	0.199
199	92.78	0.846	0.196
200	93.33	0.831	0.193
Shorted or no power			0

Zone Sensor Mode

Volts DC +- 5%	Ohms Rx1K	System Switch	Fan switch
0.00	**0.00**	**Short**	**Short**
0.47	2.32	OFF	AUTO
0.82	4.87	COOL	AUTO
1.09	7.68	AUTO	AUTO
1.30	10.77	OFF	ON
1.43	13.32	COOL	ON
1.54	16.13	AUTO	ON
1.65	19.48	HEAT	AUTO
1.84	27.93	HEAT	ON
1.94	35.00	EM HEAT	AUTO
2.03	43.45	EM HEAT	ON
2.50		Open circuit	Open circuit

Zone Sensor Setpoint

°F	°C	(K ohms)	DCV
90	32.22	0.1106	0.249
89	31.67	0.1301	0.288
88	31.11	0.1495	0.325
87	30.56	0.1689	0.362
86	30.00	0.1884	0.397
85	29.44	0.2079	0.430
84	28.89	0.2273	0.463
83	28.33	0.2468	0.495
82	27.78	0.2663	0.526
81	27.22	0.2858	0.556
80	26.67	0.3053	0.585
79	26.11	0.3247	0.613
78	25.56	0.3442	0.640
77	25.00	0.3637	0.667
76	24.44	0.3832	0.693
75	23.89	0.4026	0.718
74	23.33	0.4221	0.742

°F	°C	(K ohms)	DCV
73	22.78	0.4416	0.766
72	22.22	0.4610	0.789
71	21.67	0.4805	0.812
70	21.11	0.5000	0.834
69	20.56	0.5195	0.855
68	20.00	0.5390	0.876
67	19.44	0.5584	0.896
66	18.89	0.5779	0.916
65	18.33	0.5974	0.935
64	17.78	0.6169	0.954
63	17.22	0.6363	0.972
62	16.67	0.6558	0.990
61	16.11	0.6753	1.008
60	15.56	0.6948	1.025
59	15.00	0.7142	1.042
58	14.44	0.7337	1.058
57	13.89	0.7544	1.075
56	13.33	0.7751	1.092
55	12.78	0.7958	1.108
54	12.22	0.8166	1.124
53	11.67	0.8373	1.139
52	11.11	0.8580	1.155
51	10.56	0.8787	1.169
50	10.00	0.8994	1.184
49	9.44	0.9179	1.197
48	8.89	0.9363	1.209
47	8.33	0.9548	1.221
46	7.78	0.9733	1.233
45	7.22	0.9918	1.245
44	6.67	1.0102	1.257
43	6.11	1.0287	1.268
42	5.56	1.0472	1.279
41	5.00	1.0656	1.290
40	4.44	1.0841	1.301

Zone Sensor Info

The BAYSENS119 will not work on the Symbio 700.

The BAYSENS924 will not work on the Symbio 700 you need a X13791009001 (BAYSENS800).

You also need a BACnet enabled Symbio 700 UC.

If the Odyssey condenser wasn't ordered with a BACnet enabled Symbio 700 UC, Model Number Digit 21 = 1, you need to replace the Symbio 700 with a version that has BACnet enabled (MOD03103).

Additional Thermostat / Zone Sensor Info

On the Symbio 700 UC J19-7 and J21-1 are current limited to 1.1 amps.

On the Symbio Relay Board J5-2 is current limited to 300 ma.

Open voltage on sensors is 2.5 volts, divide Reliatel Values in half.

Open sensor and a shorted sensor reports 200°

If someone uses the **BAYSENS109 or 110,** they can't hook up to J19-6 & 7 to the Symbio because that is now 24VAC and Common, J19-8, 9 and 10 are not present.

With a thermostat

If you are using a Conventional Stat but the unit is configured for a Zone Sensor, you will get a Customer Module Comm error because the external auto stop will install itself, after you set it up for Conventional Stat be sure the External Auto stop is Not Installed.

On Symbio heat pumps, Y1 + W2...after a 3-minute delay for compressor(s) to come on the electric heat comes on within 30 seconds

Symbio 700 (UC) Y1 + X2 nothing will run, not even the indoor fan.

Symbio 700 (UC) Y1 + W2 + X2 nothing will run, not even the indoor fan.

Y2 before Y1 – Circuit 1 on, Add Y1 after 3 minutes – Circuit 2 on, remove Y2 – Circuit 2 off, remove Y1 – Circuit 1 off.

Y1 and Y2 together – Both compressors on together (5 seconds apart) the assumption is that the thermostat manages inter-stage delays.

Symbio (UC) Heat Pump a W2 by itself will turn on heat.

Symbio Relay Board Y1 + Y2 + W1 + W2 will still activate the heat outputs.

BAYSENS800 wiring

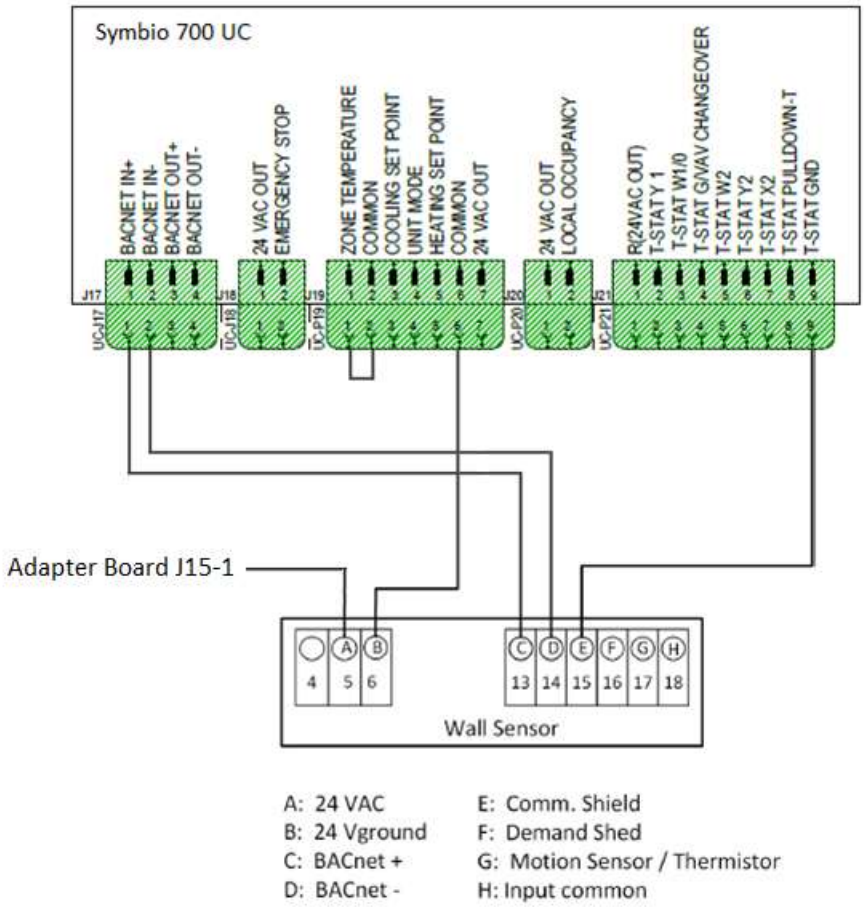

Set temp sensor to internal and jumper J19-1 & 2

BAYSENS800 Setup in the Phone APP

On the phone App go to Settings, System, set Arbitration Method Request to Enable External BAS Control.

In Settings, View Configuration, EDIT set Space Controller Type to Single Setpoint Zone Sensor.

In Tools, Protocol Configuration, set to BACnet MS/TP, then SAVE.

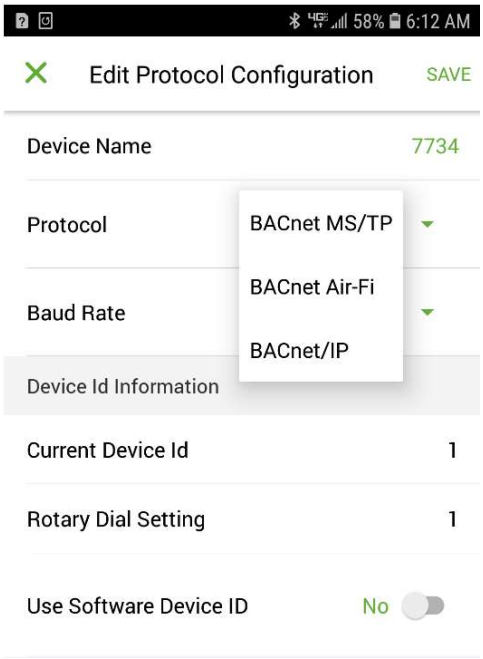

BAYSENS800 Setup in TU

Connect with TU and go to the Controller Settings tab.

Click on Protocol and select BACnet MS/TP.

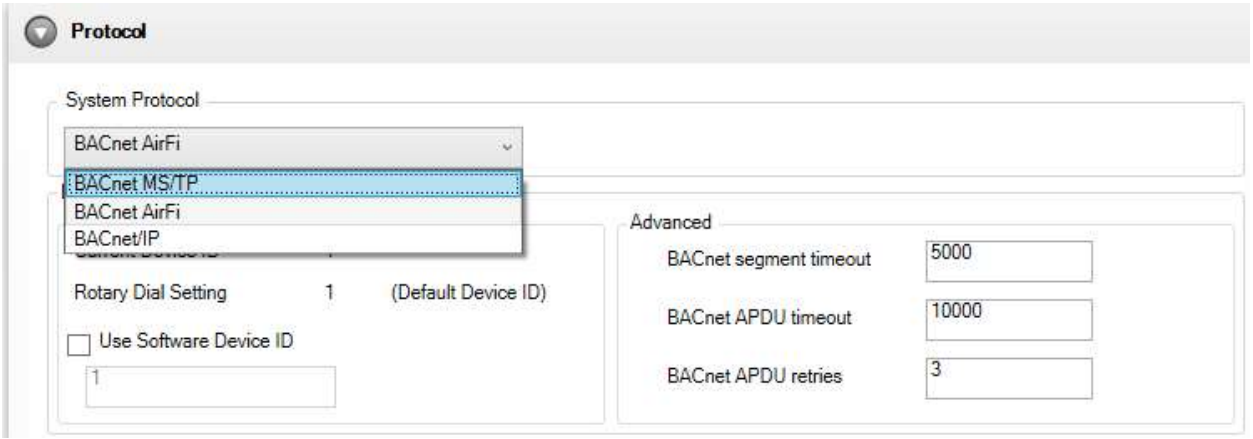

Click Send to Device.

BAYSENS135 / X13790886 / Wiring

Feature Description	BAYSENS135*	Symbio 700 terminal block (J19) Position
Zone Temperature	1	1
2.5 Volt Common	2	2
Cool Setpoint	3	3
System / Fan Mode	4	4
Heating Setpoint	5	5
COMM +	N/A	N/A
COMM -	N/A	N/A
S1	N/A	N/A
S2	N/A	N/A
Ground (24 VAC Common)	10	6
24 VAC	11	7

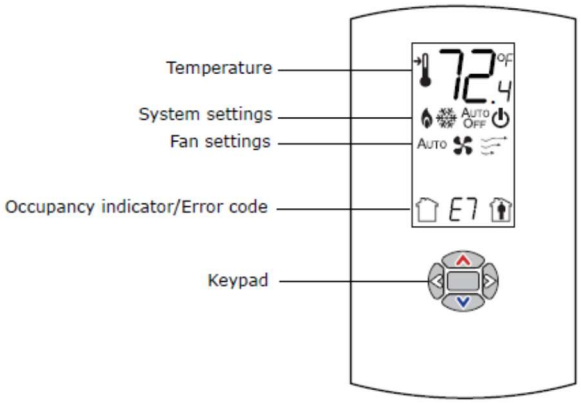

Sensor type	Features					Part number	BAYSENS	Global parts
	Setpoint	Fan control	System	Occupancy	LEDs			
Temperature sensor with LCD display[a][b]	Single	No	No	Yes	No	X1379088601	NA	SEN02076
	Single	Off/On/ Auto/Low/ Med/High	No	No		X1379088604	NA	NA
	Dual	Auto/On	Cool/Off/Auto/ Heat/Em Heat	No		X1379088605	BAYSENS135A	NA

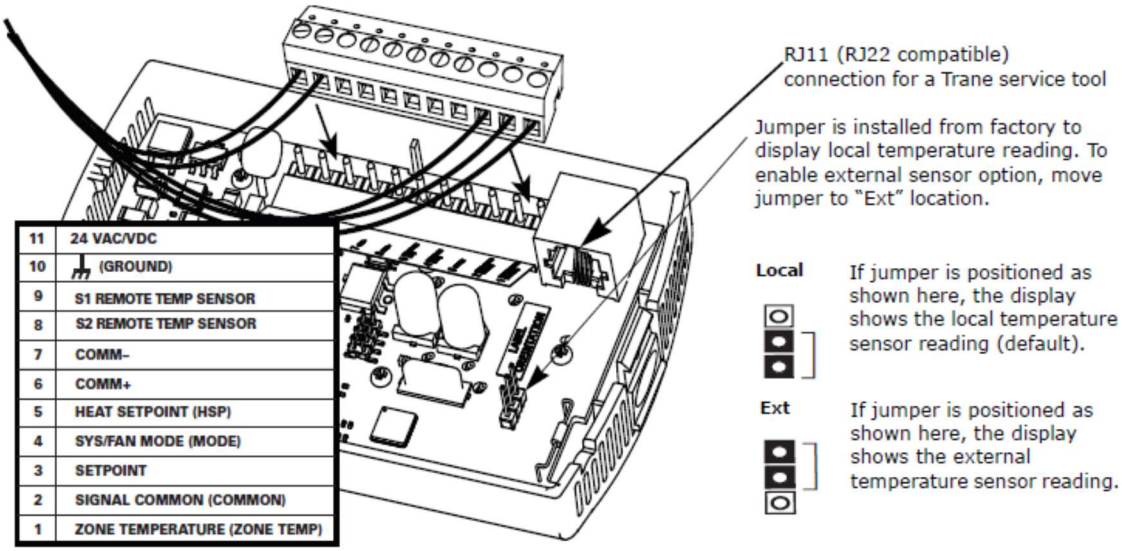
RJ11 (RJ22 compatible) connection for a Trane service tool
Jumper is installed from factory to display local temperature reading. To enable external sensor option, move jumper to "Ext" location.
Local
If jumper is positioned as shown here, the display shows the local temperature sensor reading (default).
Ext
If jumper is positioned as shown here, the display shows the external temperature sensor reading.
11 24 VAC/VDC
10 (GROUND)
9 S1 REMOTE TEMP SENSOR
8 S2 REMOTE TEMP SENSOR
7 COMM–
6 COMM+
5 HEAT SETPOINT (HSP)
4 SYS/FAN MODE (MODE)
3 SETPOINT
2 SIGNAL COMMON (COMMON)
1 ZONE TEMPERATURE (ZONE TEMP)

Zone Sensor Averaging

When a large zone is being conditioned, it may not be easy to find one place that provides a good typical room temperature all day long. By using multiple sensors, the average temperature can be sensed and provide operation more acceptable for the zone.

The quantity of sensors in the sensing circuit is extremely important. The quantity must be a "squared" number that allows them to be wired in series-parallel configuration. The resistance of the averaging circuit must duplicate the resistance of a single sensor. The quantities in the averaging circuit will be 4, 9, 16 or etc. A 4-sensor circuit is typical. (Note: Operation with 2 or 3 sensors is not possible).

Space temperature averaging is accomplished by wiring the correct number of sensors as shown. The fewest number of sensors required to accomplish space temperature averaging is four. See note below.

NOTE: A non-programmable sensor can be used as one of the sensors wired in series/parallel with the others.
A programmable sensor cannot be used as one of the averaging sensors.

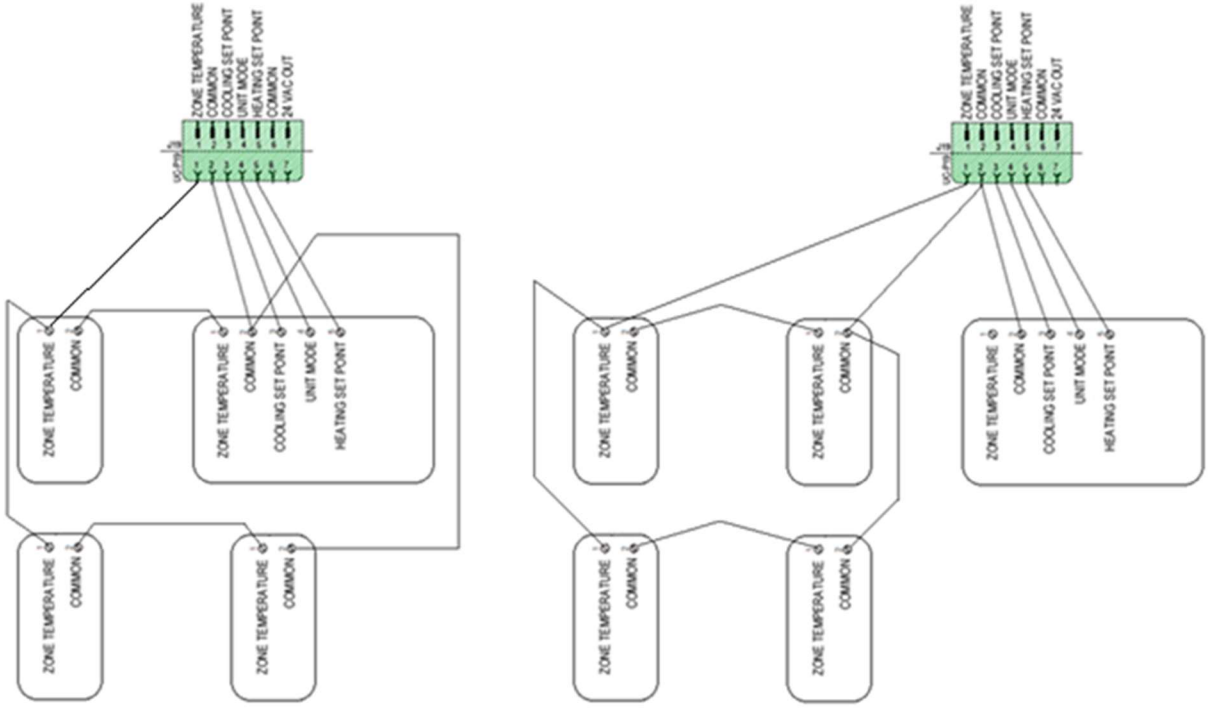

Remote Sensor Wiring

Using a BAYSENS108 and a BAYSENS077 as an example.

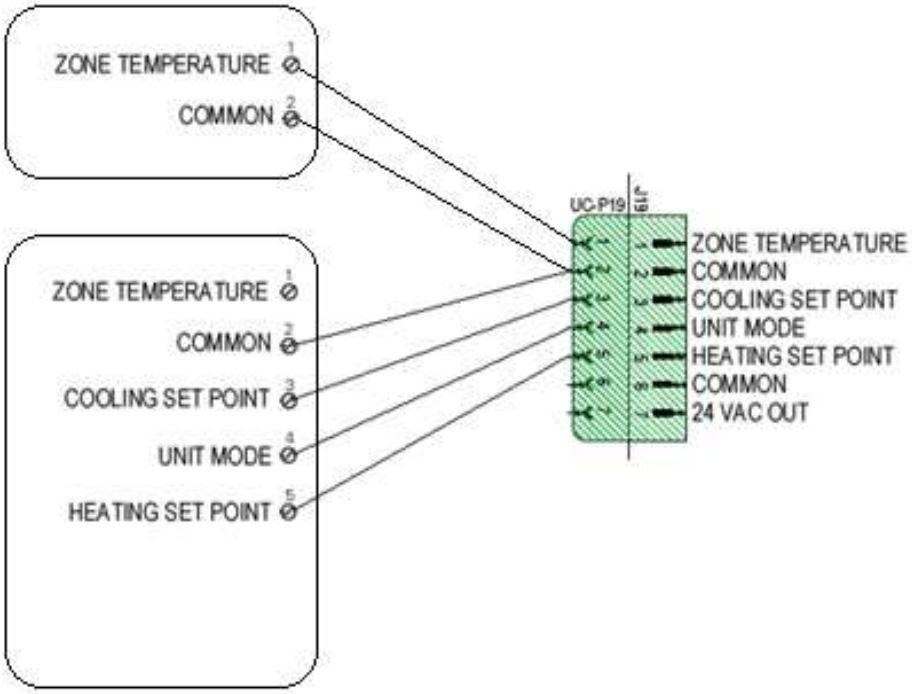

Condenser Fan Rotation for Dual Fan Units

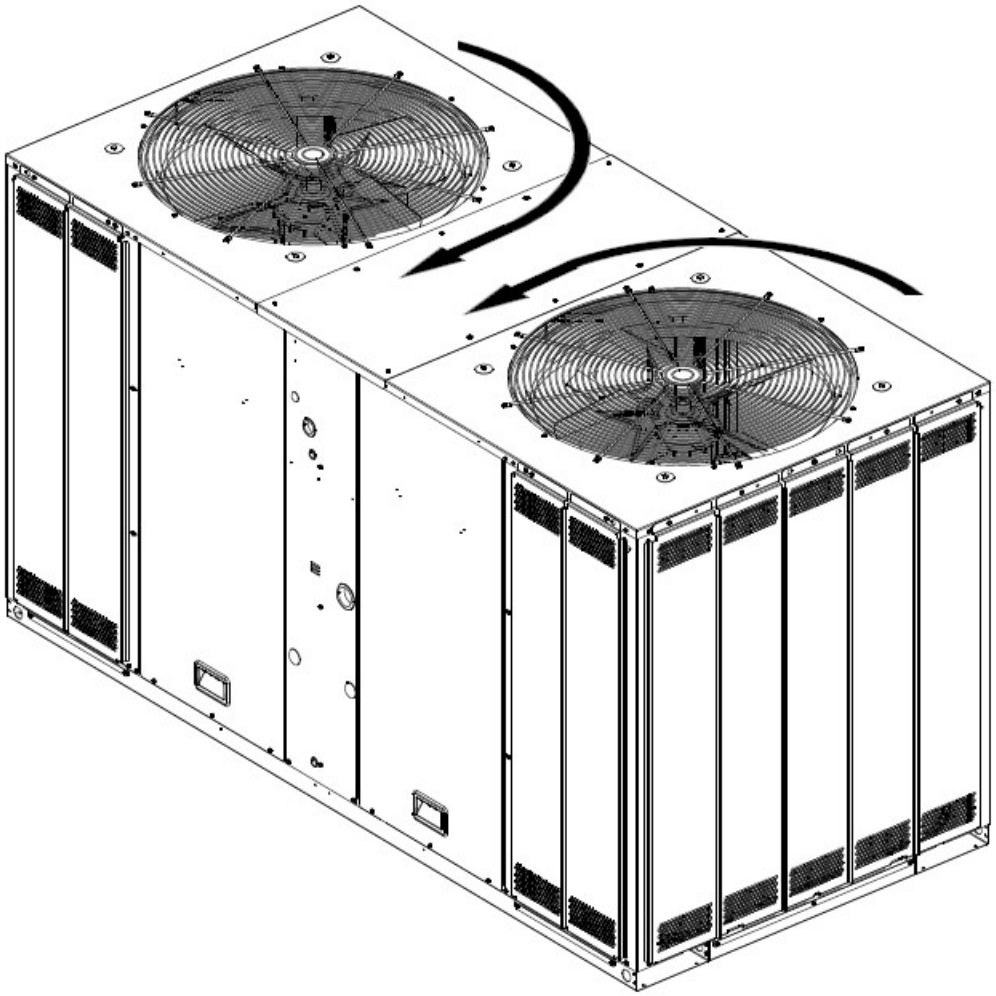

Condenser Fan Staging

Dual condenser fan - shared airstream *manifolded* **(cooling only)**

Unit Operation	Unit Response
Compressor 1 Output ON	Condenser Fan Output 1 ON +Condenser Fan Output 2 ON
Compressor 2 Output ON	Condenser Fan Output 1 ON +Condenser Fan Output 2 ON
Compressor 1 Output ON + Compressor 2 Output ON	Condenser Fan Output 1 ON +Condenser Fan Output 2 ON

Dual condenser fan - independent airstream *dual* **(cooling only and heat pump)**

Unit Operation	Unit Response
Compressor 1 Output ON	Condenser Fan Output 1 ON
Compressor 2 Output ON	Condenser Fan Output 2 ON
Compressor 1 Output ON + Compressor 2 Output ON	Condenser Fan Output 1 ON +Condenser Fan Output 2 ON

Compressor Staging

Cooling Only (Electric Heat) – CVZT & VVZT

Dual compressor cooling staging (manifold or independent)

Unit Operation	**Unit Response**
Cooling Stage 1	Compressor 1 Output ON
Cooling Stage 2	Compressor 1 Output ON + Compressor 2 Output ON

Dual unloading compressor cooling staging (10 and 20 ton)

Unit Operation	Unit Response
Cooling Stage 1	Compressor 1 Output ON + Compressor 2 Output ON
Cooling Stage 2	Compressor 1 Output ON +Compressor 1 Unloader Solenoid ON + Compressor 2 Output ON +Compressor 2 Unloader Solenoid ON

Heat Pump – CVZT & VVZT

Dual compressor cooling staging (manifold or independent)

Unit Operation	**Unit Response**
Cooling Stage 1	Comrpessor 1 Output ON
Cooling Stage 2	Compressor 1 Output ON + Compressor 2 Output ON

Constant Volume/Multi-Speed Fan Space Temperature Control (CVZT)

Similar to the Reliatel control system, the Symbio 700 includes a single-loop (space temperature only) control sequence.

The sequence is PI-based (proportional, integral) and strives to maintain space temperature within 1F of the Active Cooling and Heating setpoints.

When Space Temperature Active > Space Temp Cooling Setpoint Status, the algorithm will begin calculating a need for Cooling capacity to be energized.

When Space Temperature Active < Space Temp Heating Setpoint Status, the algorithm will begin calculating a need for Heating capacity to be energized.

When Space Temp Heating Setpoint Status ≤ Space Temperature Active ≤ Space Temp Cooling Setpoint Status:

The algorithm will begin calculating a reduction in need for any active Cooling or Heating capacity if ON

If no Cooling or Heating capacity is Active, Cooling and Heating capacity will remain Inactive

Space Temperature Recovery

If the Space Temperature gets 3F out of control (above cooling setpoint or below heating setpoint), a recovery sequence will be initiated such that the controller will immediately request 1 stage of cooling or heating to be ON.

Once a stage of cooling or heating is energized due to a space temperature recovery request, that stage of capacity and any additional stages of capacity will revert to be under the normal PI control sequence.

Recovery will bring on a stage of capacity, but the normal PI controller will be responsible for maintaining the active capacity once energized.

Supply Fan Control

The supply fan will be controlled “ON” 5 seconds before heating or cooling capacity is energized. When heating or cooling capacity is de-energized, a supply fan off delay will be applied based on active capacity.

For Single-Speed supply fan configured systems, the supply fan will be controlled “ON” during all cooling and heating sequences.

For Multi-Speed supply fan configured systems, the fan will operate per the following:

Low Speed when the Supply Fan is ON without Active Capacity (unless ON due to an override function)

Low Speed when the unit is operating at its minimum cooling stage

High Speed when the unit is operating at its maximum cooling stage, or while any heating stages are active.

Variable Volume Fan Space Temperature Control (SZVAV/VVZT)

Similar to the Reliatel control system, the Symbio 700 includes a Single Zone VAV (VVZT) control sequence.

When configured for VVZT control, this sequence is only applicable when the following are true; otherwise, the CVZT sequence is leveraged:

Occupancy Status = Occupied

Supply Fan Configuration Status = Continuous

Discharge Air Temperature sensor is not in an Alarm state

The unit is operating under a cooling demand (SZVAV heating is not applicable with staged heat on initial launch of Symbio 700 for Odyssey)

The sequence is PI-based (proportional, integral) and strives to maintain space temperature within 1F of the Active Cooling and Heating setpoints.

When Space Temperature Active > Space Temp Cooling Setpoint Status, the algorithm will begin calculating a need for Cooling capacity to be energized. A discharge air temperature setpoint will be calculated lower in order to determine proper compressor staging needs.

When Space Temperature Active < Space Temp Cooling Setpoint Status, the algorithm will begin calculating a reduction in need for Cooling capacity to be energized. A discharge air temperature setpoint will be calculated higher in order to determine proper compressor staging needs.

Different from the CVZT sequence, compressors will be staged to maintain the discharge air temperature at the Discharge Air Temperature Setpoint Active setpoint.

Supply Fan Control

In order for the VVZT control sequence to be active, the Supply Fan Configuration Status must be ON/Continuous.

The fan speed is continuously variable on VVZT systems. The fan will remain at minimum speed (based on active compressor stages) until the space demand requires additional airflow.

All heating is accomplished with the CVZT control sequence, and the fan will be controlled at maximum speed**.**

VVZT DAT Control Mode

With the Symbio 700 VVZT control sequence, the end user will be able to choose to use the internally derived Discharge Air Temperature Setpoint Active, or to override the value with their own. Use-cases for this may include optimizing humidity control sequences per-application or to meet certain product-level specifications.

If the VVZT DAT Control Mode – Active point is set to “Auto”, the VVZT control algorithm will use the internally derived Discharge Air Temperature Setpoint Active, for all cooling capacity output control.

If the VVZT DAT Control Mode – Active point is set to “Manual”, the VVZT control algorithm will use the Discharge Air Cooling Setpoint (Target) – Active as an upper limit for the Discharge Air Temperature Setpoint Active calculation.

Example: Set to 50F, the unit will use 50F or lower discharge air temperature setpoint for all space cooling demands.

When space temperature is 2F below cooling setpoint or 1F above heating setpoint, the controller will suspend the discharge air setpoint active override to maintain space comfort until space temperature recovers to above cooling setpoint.

Alternatively, the Discharge Air Maximum Cool Limit and Discharge Air Minimum Cool Limit can be set equal to force the unit to use a constant discharge air temperature setpoint for cooling control.

While these overrides/sequences are not recommended for space comfort control, the control sequence will support it**.**

Supply Fan Speed Control

At the initial launch of the Symbio 700 for Odyssey equipment, three supply fan types are supported:

Single-Speed, belt-driven fans

These fan types are controlled ON/OFF via a single binary output on the Symbio 700.

2-Speed & Variable Speed VFD-driven fans

These fan types are controlled via Modbus through a wired communication link (except for air-handlers paired with non-Trane or legacy Electromechanical condensers)

At all times, a minimum fan speed will be maintained based on equipment design requirements.

Supply Fan Status Points

Single-Speed

Supply Fan Output Status - Indicates whether the fan is commanded ON or OFF

Supply Fan Speed Status - 0% when fan is OFF, 100% when fan is ON

VFD-driven

Supply Fan Output Status - Indicates whether the fan is commanded ON or OFF

Supply Fan Speed Status - Estimated active fan capacity from 0-100%. 0% = OFF, 100% = Maximum Speed per application

Supply Fan Signal Command Status - Modbus signal command to VFD; 0% = Minimum Configured Drive Speed, 100% = Maximum Configured Drive Speed

Status points will reflect accurately but can be impacted by VFD setup and setpoints.

Fan Setpoints with VFD-driven Fan Types

When a system is equipped with a VFD, the minimum and maximum VFD parameters can be adjusted to tune the airflow to meet the application requirements.

In addition to this, the Symbio 700 supports setpoints that can be used to adjust airflow as needed:

Supply Fan Maximum Speed Setpoint

Range: 67-100%

Operation:

This setpoint “trims” the maximum fan speed, based on the configured maximum VFD speed

Example: VFD Max = 60Hz

Supply Fan Maximum Speed Setpoint @ 75% yields a maximum of 45Hz VFD output.

Effective VFD Max (to be used in Supply Fan Minimum Speed Setpoint application) will be set to 45Hz

Supply Fan Minimum Speed Setpoint

Range: 0-100%

Operation:

0-100% over minimum to effective maximum VFD configured fan speed

Example: VFD Min = 30Hz, Effective VFD Max = 60Hz

Supply Fan Minimum Speed Setpoint @ 50% yields 45Hz VFD output.

Minimum and Maximum Speed Setpoints interact to ensure that the minimum defined fan speed at a given equipment operating condition is maintained.

Supply Fan Percentages

Multi-speed minimum supply fan speeds

Unit Operation	Supply Fan Speed
Off	0%
Fan Only	41.7%
Cooling Stage 1	41.7%
Cooling Stage 2	100%
Heat Pump Heating	100%
Electric/Auxiliary Heating	100%

Variable speed minimum supply fan speeds

Unit Operation	Supply Fan Speed
Off	0%
Fan Only	58%
Cooling Stage 1	58%
Cooling Stage 2	80%
Heat Pump Heating	100%
Electric/Auxiliary Heating	100%

Airflow Adjustments

Constant Volume Units
(Unit model number digit 15 = "1")

Adjust the motor sheave – close the sheave in for more fan RPM's, open it for less.

2 Stage Airflow/Single Zone VAV (Symbio Cond Only)
(Unit Model Number Digit 15 = "D")

Use the Symbio Phone App Settings, Indoor, Supply Fan Maximum Speed Setpoint and Supply Fan Minimum Speed Setpoint

2 Stage Airflow (Electromechanical Cond Only)
(Unit Model Number Digit 15 = "C")

For 2-Speed VFD controlled units the desired maximum air flow (High Speed) is set by reprogramming parameter 6-15 on the VFD to the frequency value that best meets the RPM requirement as shown in the catalog fan tables**.**

TR-150 Procedure

The Main Menu accesses all parameters.

1. Press the [Menu] key twice until indicator in display is placed above "Main Menu".

2. Press [▼] to 6-** Analog In/Out

3. Press [Ok]

4. Press [▼] to 6-1* Analog Input 53

5. Press [Ok]

6. Press [▼] to 6-15 Terminal 53 High Ref. / Feedback Value

7.Press [Ok]

8. Press [▲] [▼] to set/change.

9.Press [Ok] to save changes.

10.Press [Back] until you get to the main screen.

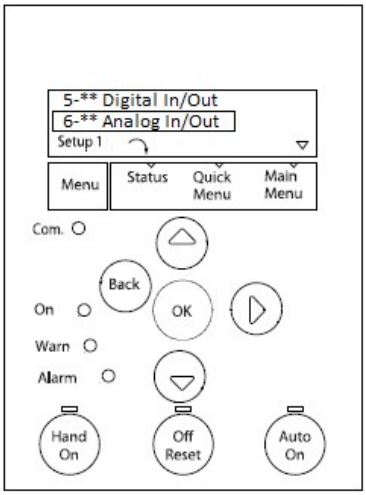

Symbio TR-150 VFD Parameters

Odyssey Symbio TR150 Parameters

ID	Description	Units	Values when using Keypad
0-0* Basic Settings			
0-01	Language		[0] English US
0-03	Regional Settings		[1] North American
0-06	Grid Type		[102] 200-240V/60Hz for 208 & 230V/60Hz units [122] 440-480V/60Hz for 460V/60Hz units [132] 525-600V/60Hz for 575V/60Hz units
0-4* LCP Keypad			
0-40	[Hand on] Key on LCP		[0] Disabled
1-0* General Settings			
1-03	Torque Characteristics		[1] Variable torque
1-06	Clockwise Direction		[1] Inverse
1-2* Motor Data			
1-20	Motor Power		[9] 1.5 kW - 2 hp [10] 2.2 kW - 3 hp [12] 3.7 kW - 5 hp [14] 5.5 kW - 7.5 hp
1-22	Motor Voltage	Volt	[208] 208 V [460] 460 V [575] 575 V
1-23	Motor Frequency	Hertz	[60] 60 Hz
1-24	Motor Current	Amps	208V Motors [6.12] [9.4] [13.4] [19.6] 460V Motors [3.09] [4.6] [6.3] [8.9] 575V Motors [2.2] [3.7] [5.1] [7.1]
1-25	Nominal Speed	RPM	[1725][3450]
1-7* Start Adjustments			
1-73	Flying Start		[1] Enabled
1-8* Stop Adjustments			
1-82	Min Speed for Function at Stop		[0.1] 0.1
1-9* Motor Temperature			
1-90	Motor Thermal Protection		[4] ETR trip 1
2-0* DC-Brake			
2-00	DC Hold/Preheat Current	%	[0] 0%
2-01	DC Brake Current	%	[0] 0%
2-02	DC Braking Time	sec	[0] 0s
2-04	DC Brake Cut In Speed	Hz	[9.9] 9.9 Hz
3-0* Reference Limits			
3-02	Minimum Reference	Hz	[25] 25 Hz
3-03	Maximum Reference	Hz	[60] 60 Hz
3-1* References			
3-15	Reference 1 Source		[11] Local Bus (Symbio) or [1] Analog Input 53 (EM)
3-16	Reference 2 Source		[0] No Function
3-17	Reference 3 Source		[0] No Function
3-4* Ramp 1			
3-41	Ramp 1 Ramp Up Time	Sec	[30] 30 seconds
3-42	Ramp 1 Ramp Down Time	Sec	[30] 30 seconds

4-1* Motor Limits			
4-10	Motor Speed Direction		[2] Both Directions
4-12	Motor Speed Low Limit	Hz	[25] 25 Hz
4-14	Motor Speed High Limit	Hz	[60] 60 Hz
4-18	Current Limit	%	[115] 115%
4-19	Max Output Frequency	Hz	[65] 65 Hz
5-1* Digital Inputs			
5-10	Terminal 18 Digital Input		[0] No Operation (Symbio) or [8] Start (EM)
5-12	Terminal 27 Digital Input		[0] No Operation (Symbio) or [2] Coast Inverse (EM)
5-13	Terminal 29 Digital Input		[0] No Operation
5-4* Relays			
5-40.0	Function Relay		[160] No Alarm
5-40.1	Function Relay		[6] Running
6-1* Analog Input 53			
6-14	Terminal 53 Low Ref./Feedb. Value	Hz	[25] 25 Hz
6-15	Terminal 53 High Ref./Feedb. Value	Hz	[60] 60 Hz
8-0* General Settings			
8-01	Control Site		[2] Controlword only (Symbio) or [0] Digital and ctrl.word (EM)
8-02	Control Source		[1] FC Port (Symbio) or [0] None (EM)
8-03	Control Timeout Time	Sec	[15] 15s
8-04	Control Timeout Function		[2] Stop
8-3* FC Port Settings			
8-30	Protocol		[2] Modbus RTU
8-31	Address		[2] Address 2
8-32	Baud Rate		[7] 115200 Baud
8-33	Parity / Stop Bits		[0] Even Parity, 1 Stop Bits
8-35	Minimum Response Delay	Sec	[0.005] 5ms Min Response Delay Time
8-36	Maximum Response Delay	Sec	[0.1] 100ms Max Response Delay Time
14-01	Switching Frequency	kHz	[8] 10 KHz
14-11	Mains Voltage at Mains Fault	Volt	Set based on motor nameplate voltage [177] for 208V&230V motor [391] for 460V motor [489] for 575V motor
14-12	Function at Main Imbalance		[3] Derate at Mains inbalance
14-20	Reset Mode		[5] Automatic reset x 5
14-50	RFI Filter		[0] OFF
14-61	Function at Inverter Overload		[1] Derate

0-** Operation / Display, 1-** Load and Motor, 2-**Brakes, 3-**Reference / Ramps,
4-** Limits / Warnings, 5-** Digital In / Out, 6-** Analog In / Out, 8-** Comm. And Options,
14-** Special Functions

VFD Parameter Info

If 3-15 is set to **Analog Input 53** (with a communicating VFD) the VFD will only run minimum speed.

If 8-01 is set to **Digital** (on a communicating VFD) the fan won't run and you get an Alarm on the Symbio for Supply Fan Failure.

If 8-30, 32 or 33 is set wrong (on a communicating VFD) the fan won't run and you get an Alarm on the Symbio for Supply Fan VFD Communication.

If you are in the UI and accidently change something to a value requiring a VFD (and you don't have a communicating VFD) you will get a diagnostic for VFD comm fail until you cycle power.

VFD Harness Part Numbers

Wire Harness, VFD Pigtail, Two Speed, PPF53 to VFD is WIR01085

Wire Harness, Supply Fan Controls, Two Speed, PPM53 to Relay Board P11 is WIR01090

VFD Faults requiring Manual Reset

Diagnostic: Supply Fan Failure

If while the Supply Fan VFD is requested to run, the VFD Running Status from the drive is set to False for 40 continuous seconds, this failure will be detected.

All unit functions will be shut down immediately – Requires Manual Reset or Power Cycle.

Supply Fan VFD Communication Status

If continual loss of communication between the controller and the VFD has occurred for a 30 second period, this failure will be detected.

All unit functions will be shut down immediately – Requires Manual Reset or Power Cycle.

TR150 VFD Communication Troubleshooting

If communication is normal, the Com LED on the VFD keypad will fast and slow flash.

Normal VFD com voltage 4.73 to 4.15 VDC pulsing approximately 10 times a minute, no pattern.

If the modbus wires are crossed between the Adapter Board and the Relay Board you get 4.39 VDC steady on Modbus + to Modbus -, the Com LED on the VFD keypad will be **ON STEADY** and you will get **W-017 Ctrl.word TO** on the VFD keypad.

Example – 1 and 2 crossed, 1 and 3 crossed.

If the one of the Modbus wires are open, the Com LED on the VFD keypad flashes once every 5 seconds, the VFD keypad display would **NOT** have a **W-017 Ctrl.word TO**, but the Symbio Board will show VFD not communicating.

If Modbus + is open – terminal 68 to 69 will read 3.4 VDC, 68 to 61 will read 3.5 VDC, 69 to 61 will read .1 VDC.

If Modbus – is open – terminal 68 to 69 will read 4.8 VDC, 68 to 61 will read 4.8 VDC, 69 to 61 will read 4.8 VDC

If all 3 of the field comm wires are open, you will get 4.95 VDC steady at the Symbio 700 (UC), the Com LED on the VFD keypad will be **OFF** and you will get **W-017 Ctrl.word TO** on the VFD keypad.

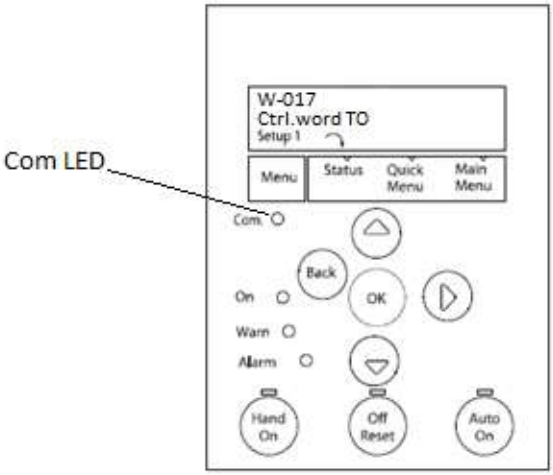

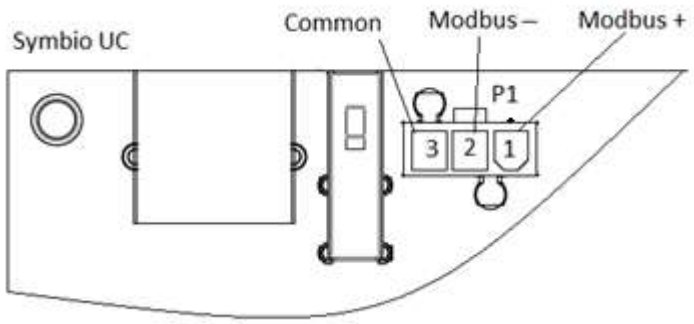
Symbio UC
Common
Modbus –
Modbus +
P1
3
2
1

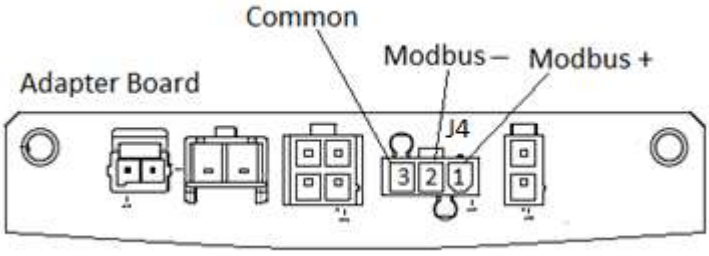
Common
Modbus –
Modbus +
Adapter Board
J4
3
2
1

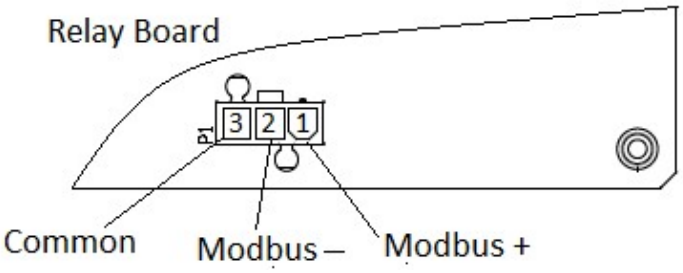
Relay Board
P1
3
2
1
Common
Modbus –
Modbus +

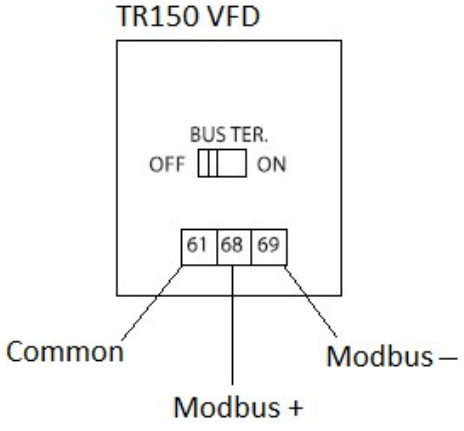
TR150 VFD
BUS TER.
OFF
ON
61
68
69
Common
Modbus –
Modbus +

Evaporator Defrost Control

Evaporator Defrost Control can be initiated through two means, based on configuration.

If configured for Evaporator Defrost Control = Enabled:

When the unit is operating in a "Cool" mode with a valid Outdoor Air Temperature, the EDC function will keep track of the amount of time that at least one compressor in a unit is commanded ON and the Outdoor Air Temperature Active is less than the low ambient temperature defined below. If the Accumulated Compressor On Time reaches 10 minutes, the EDC function will cause the Compressor Output(s) to de-energize for three minutes. The supply fan continues to operate during this three-minute interval at 100% capacity. After the three-minute EDC timer has expired, the EDC function is ended and compressors are allowed to operate as requested by the algorithm.

Low Ambient Temperature Setpoints:

Single Compressor Systems – 55F

Multi-Compressor Systems – 40F

If configured for FroStat = Installed:

A FroStat input can also be used to directly request the Evaporator Defrost Control function

When the unit is running in an effective "Cool" mode, the FroStat input will directly control the FroStat diagnostic. If the FroStat input CLOSES, the diagnostic will be annunciated.

When the unit is running in an effective "Heat" mode, and the Refrigeration System = Heat Pump, the FroStat diagnostic will be controlled "Inactive" until the following are true:

FroStat input is CLOSED

One or More Compressors have been active for Heat Pump Heating for more than 30 seconds.

Once the above two conditions are met, the FroStat Diagnostic will become Active.

The FroStat diagnostic is an Auto-Reset diagnostic such that it will be reset when the FroStat input is OPEN in either effecting unit mode.

If the FroStat diagnostic becomes active, the Compressor Output(s) will de-energize until the FroStat diagnostic is cleared. The supply fan continues to operate during the FroStat diagnostic, so long as it is still requested by a heating or cooling function.

FroStat and Evaporator Defrost Control can both be configured on a unit, although in most cases, only one should be necessary.

Note: The actual EDC Switch on the Evaporator Coil is Demand Limit in the menu!

Force Database Clear on a Symbio 700

Warning: you will have to completely reconfigure the board after this procedure.

If you see the following issues you may need to do a Force Database Clear.

Cooling Capacity Status Alarm, a text box saying Notice the unit will start, another text box saying unknown error occurred (code 00604) or (code 17010) and on the onboard display Status, settings and service is missing.

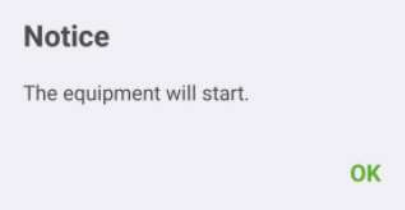

Doing an IMC reset produces and error 17.

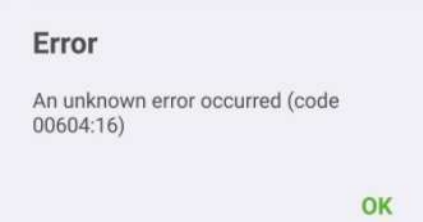

Procedure:

Power down the condenser

Set the Rotary Switches to 999

Power-up the condenser, the On-Board Display will show “Force DB Clear”

Within 30 seconds set the switches back to the normal value (or something other than 999)

The On-Board Display will show “Clearing DB”

Note: If rotary switches are not reset within 30 seconds, the Symbio 700 will power down leaving the database intact.

When the database is cleared the onboard display will show "Clear Done".

At this point, update firmware on controller to latest available (v1.00.022 or greater).

See Update Firmware in the Phone App section of this manual for procedure.

Replacing a Symbio 700 Board

Initial power-up and connecting the APP the first time.

Proceed to configuration screen and press EDIT

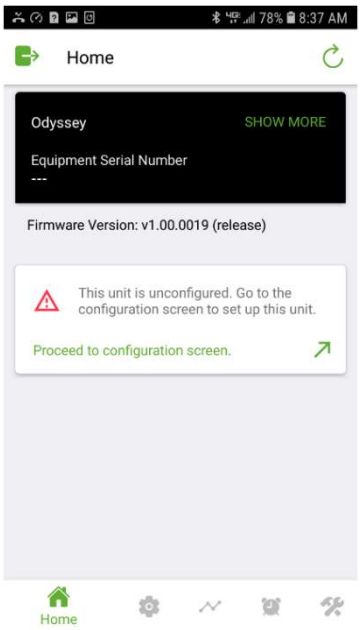

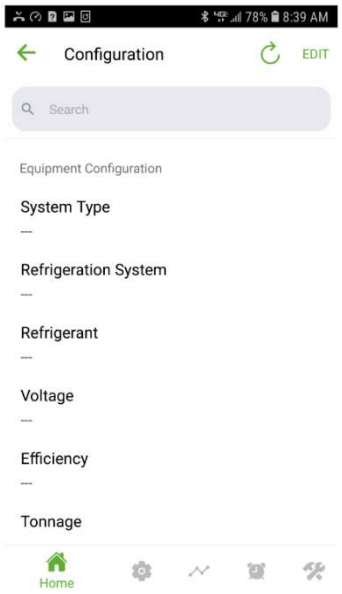

Go through the configuration until the green check mark appears.

The APP will only scroll down far enough to set the next menu item and then you have to go back to set indoor fan type, refrigerant, tonnage, single, dual or manifolded and voltage.

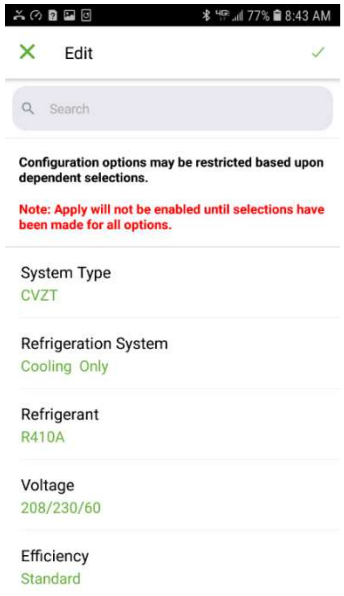

Things you can do with Tracer TU

You can connect to a Basic or advanced Symbio 700 using USB Port P13 (Direct Connection) in TU.

Adding unit information to a new board

Click Edit 

Go to the Controller Status tab, type in Unit Model Number, Serial Number and if you wish Unit Tag and Unit Sales Order Number in the appropriate fields.

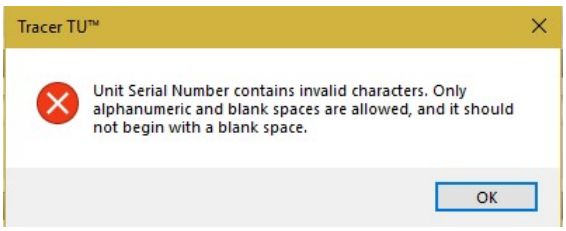

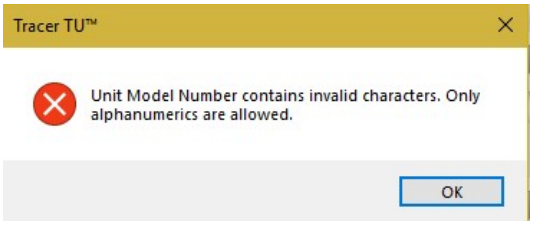

Clearing Alarm History

Go to the Alarms tab, select all in the Event Log, then on the bottom of the page click Clear Event Log



Clear Controller

Be careful with Clear Controller, it will wipe the unit serial number from the board and the configuration (things such as Tonnage, Indoor Fan Type, Voltage Type etc..) and you will have to manually reconfigure the unit. (like a new board out of the box)

Read Options Module Address

On the Controller Status tab

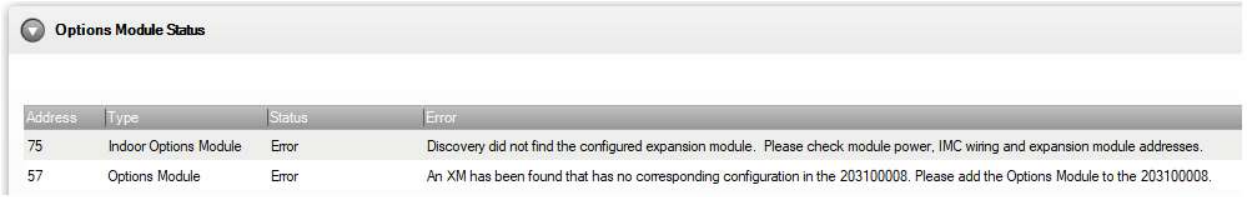

Download the Phone App!

Apple https://apps.apple.com/us/app/symbio-service-installation/id1309310176



Google Play https://play.google.com/store/apps/details?id=com.trane.mobileservicetool

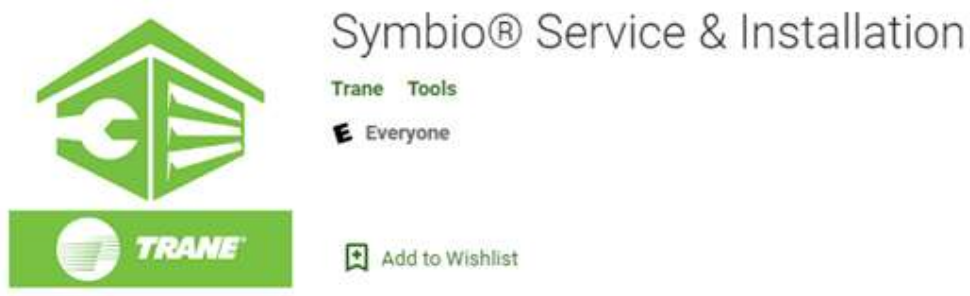

Symbio Service & Installation (mobile app) Overview

The Symbio 700 includes a built-in Bluetooth Low Energy (BLE) radio which is used to enable direct access to the 'Symbio Service and Installation' Tool. No network connections are required as this connection method enables a 1 to 1 connection between a single Symbio 700 and Mobile Phone that meets the connection requirements.

Connection Requirements:
– Mobile Phone must have 'Symbio Service and Installation' Tool installed
– Mobile Phone must have Bluetooth (BLE) 4.2 or later (i.e. Samsung Galaxy S7 or newer, or Apple iPhone 6 or newer)

This is not information that can be read in the phone's settings, if the Bluetooth version is pre 4.2 the Symbio 700 won't connect to the phone.
Bluetooth versions before 4.2 don't meet Trane's security needs.
Bluetooth version 5.0 increased connection speed and range (Samsung S8 and newer and iPhone X and newer), note: the Symbio 700 uses Bluetooth 5.0.

– 4.2: 1 Mbps with a range of 10 meters
– 5.0: 2 Mbps with a range of 40 meters

Bluetooth Connection & Pairing

The Symbio Service & Installation Tool leverages built-in BLE security and device pairing processes.

To minimize opportunity for unauthorized access to the equipment, the following are leveraged as part of the pairing process:

Unless previously connected, the BLE radio on the Symbio 700 is "OFF"; the Bluetooth LED will be OFF.

When a connection is desired, the user must "wake-up" the BLE radio on the Symbio 700 by pressing the Bluetooth button on the user interface. At this time, the Bluetooth LED will begin flashing.

Numeric Passkey Pairing requires validation of a common 6-digit passkey on the Symbio 700 and Mobile Phone before a successful connection can be made

Once the passkey is presented to the user on the Mobile Phone and on the Onboard UI for the Symbio 700, a confirmation must be made on both ends of the connection – by selecting "Pair" on the Mobile Phone, and the "Enter" button on the Symbio 700.

Once the connection is validated, the user will have established a secure connection between their Mobile Phone and the Symbio 700. The Bluetooth LED on the Symbio 700 will be solid ON.

The Symbio 700 will be included in the Bluetooth device list for the Mobile phone

Format: Trane-<unit serial number> (if there is a unit serial number, otherwise)

Format: Trane-<controller serial number>

Once connected, the connection will remain until one of the following occurs:

The user initiates a “Disconnect” through the Onboard UI or Mobile Service Tool

The Mobile Service Tool is closed on the mobile device

Power is disconnected from the Symbio 700 or mobile device

Maximum Device Limit

Android devices will be limited to 10 Symbio 700s in the Bluetooth device list. Once this limit is reached, the Mobile Service Tool App will prompt the user to remove a device before more connections can be made.

iOS device Symbio 700 connections will be monitored through the Mobile Service Tool. After successful connection to 10 Symbio 700s, the Mobile Service Tool will prompt the user to consider removing devices from their Bluetooth device list before initiating a new connection. For iOS, the Mobile Service Tool cannot force the user to remove a device, rather, only suggest it.

Login

Press Skip, go directly to the Unit List without logging in.

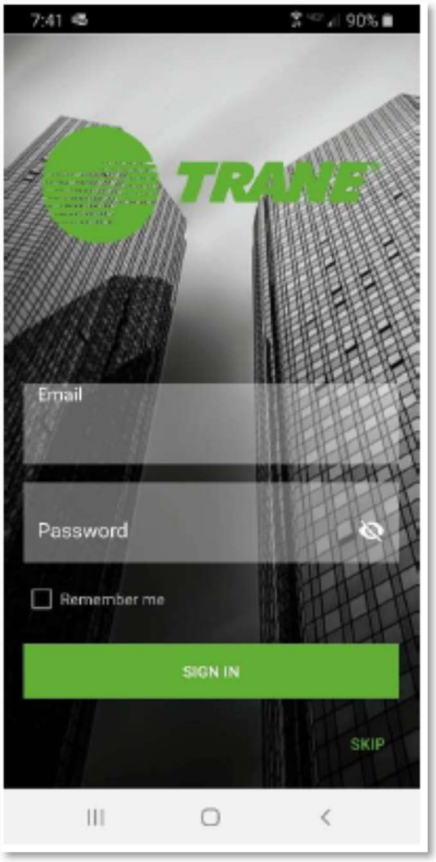

Apple



Android

Unit List

Press the 3 dots in the upper right hand corner for About, Preferences, EULA, Software Notices and Sign In (Preferences is for Language and Units)

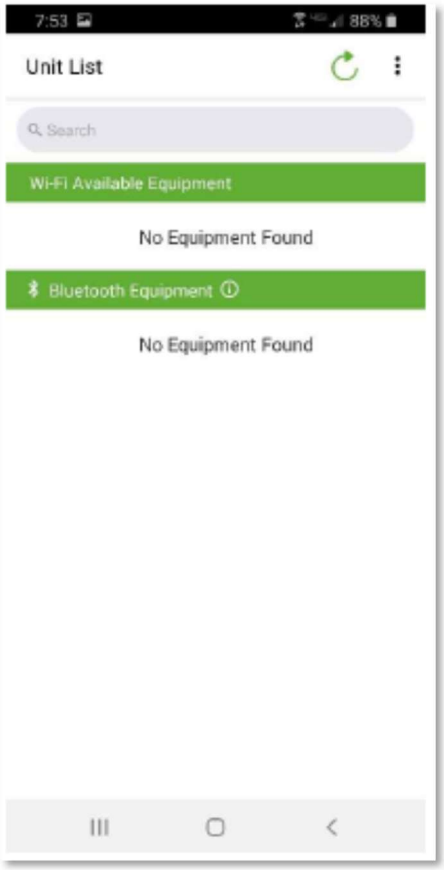

On the Unit List page, select the Symbio 700 controller that you want to pair with. If the

controller is not listed, press the refresh arrow in the upper right-hand corner of the screen.

When prompted, pair the app to the Symbio 700 controller. A popup message displays a 6-digit random number. The same number is shown on the display of the Symbio 700 controller until the pairing is complete, allowing the user to confirm connection to the intended controller.

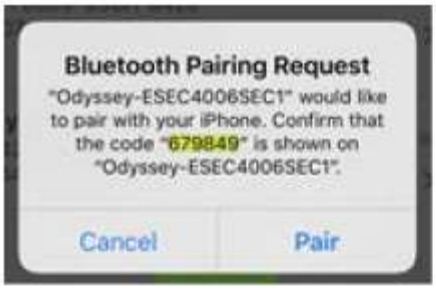

iOS

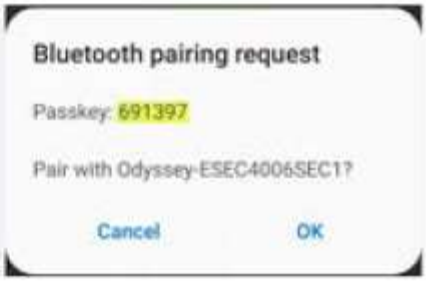

Android

Press the ✔ on the Symbio 700 on-board keyboard/display to complete the connection.

The Icons below are for the different screens



Android



HOME SETTINGS STATUS ALARMS TOOLS

Apple



HOME SETTINGS STATUS ALARMS TOOLS

HOME



Unit and controller information

The factory sets Equipment Serial Number and Model Number, these will be empty on replacement boards

Unit data – this data is dynamic based on the hardware configuration

Firmware version, this is the software version of the Symbio 700

This page refreshes every 30 seconds, to manually refresh swipe down or press refresh

Odyssey Equipment Serial Number – Press SHOW MORE for license information (Basic or Advanced)

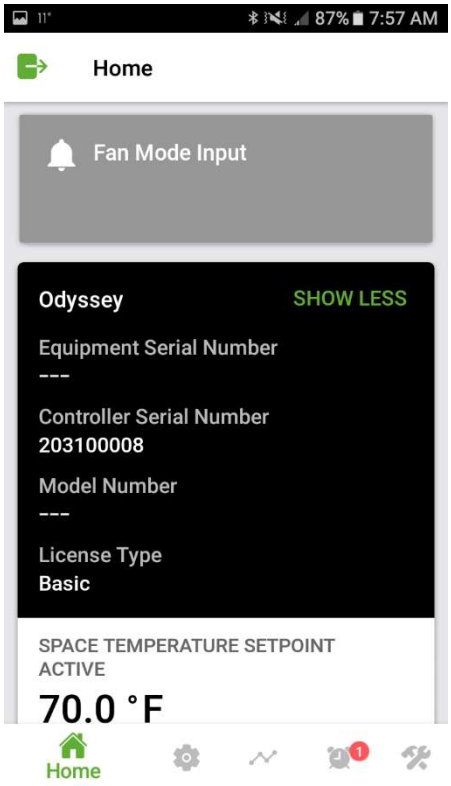

on a zone sensor

Space Temperature Setpoint Active

Heat Secondary Capacity Status

Heating Capacity Primary Status

Supply Fan Speed Status %

Cooling Capacity Status %

Heat Cool Mode Status

Occupancy Status

Space Temperature Active

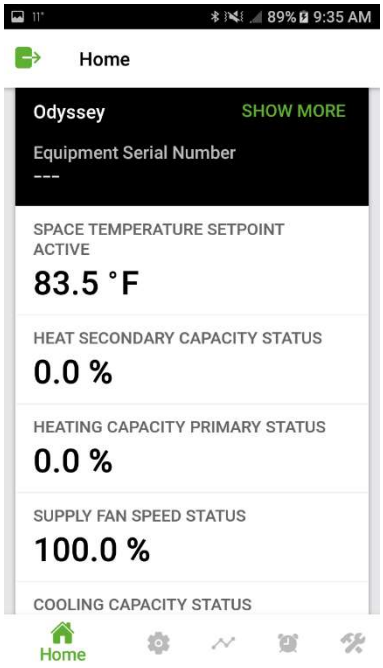

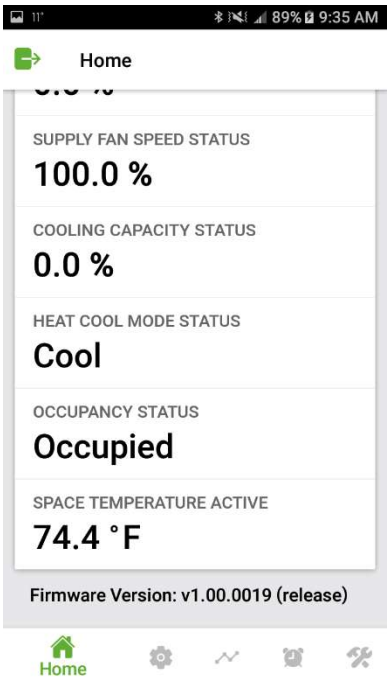

on a thermostat

Heat Secondary Capacity Status

Heating Capacity Primary Status

Supply Fan Speed Status %

Cooling Capacity Status %

Heat Mode Status

Thermostat G Input

Thermostat W1/O Input

Thermostat W2 Input

Thermostat X2 Input

Thermostat Y1 Input

Thermostat Y2 Input

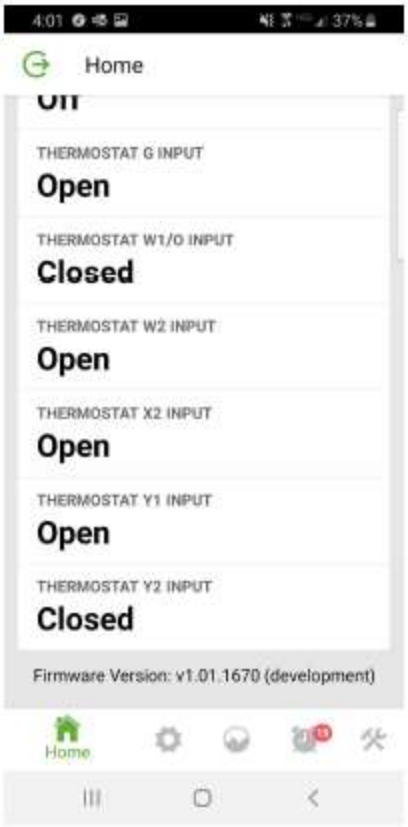

SETTINGS



This page does not auto refresh, to manually refresh swipe down or press refresh

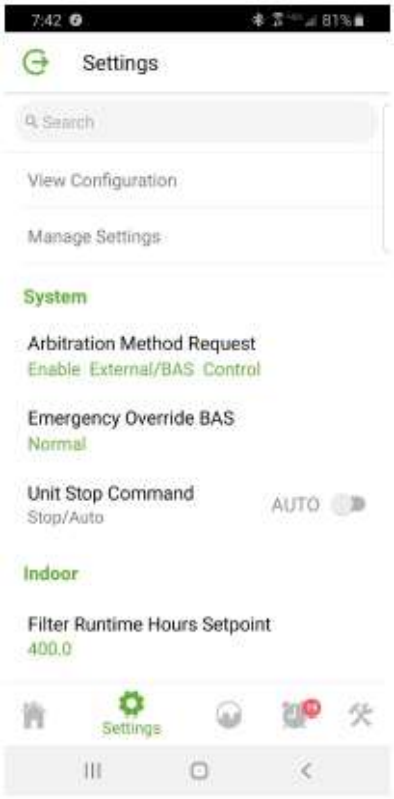

View Configuration – **EDIT**

When the edit button is pressed the equipment will be stopped

All the values are green, select the one to change

When back button is pressed the editable hardware configuration will be updated

The configuration won't be applied to the controller at this time

There are hardware parameter inter interdependencies, when a value is changed the dependencies from the current config will

be set in the editable hardware configuration

Manage Settings

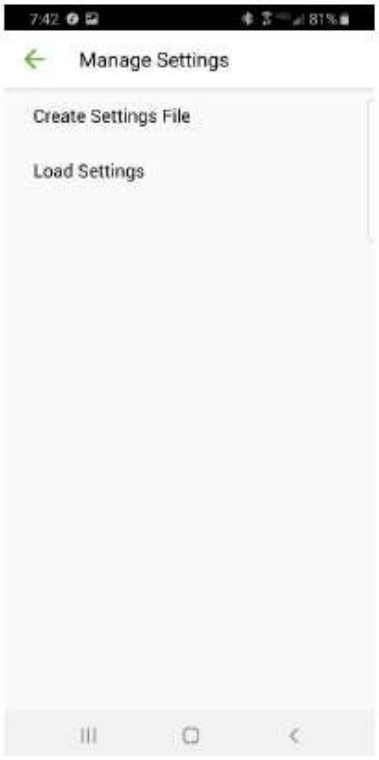

Create Settings File will create a file that is saved on the phone which contains all the settings points and their relinquish default value.

This is settings like Filter Runtime Hours Setpoint, Supply Fan Maximum Speed Setpoint (vfd), Supply Fan Minimum Speed Setpoint (vfd), Supply Fan Speed Command, Supply Fan Speed Command Enable.



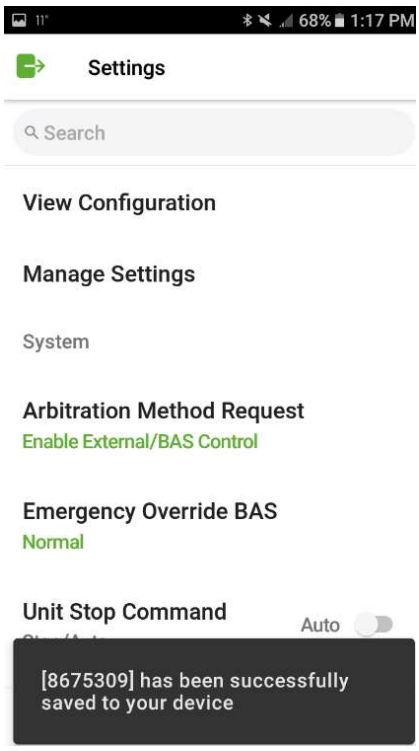

Load Settings can only be applied to a matching controller, the matching criteria is the product name (/evox/about/productName/)

When loading a settings file, it will write the relinquish default to all the points that exist.
The details for each saved settings file can be viewed.
Edit lets you rename and delete a settings file.

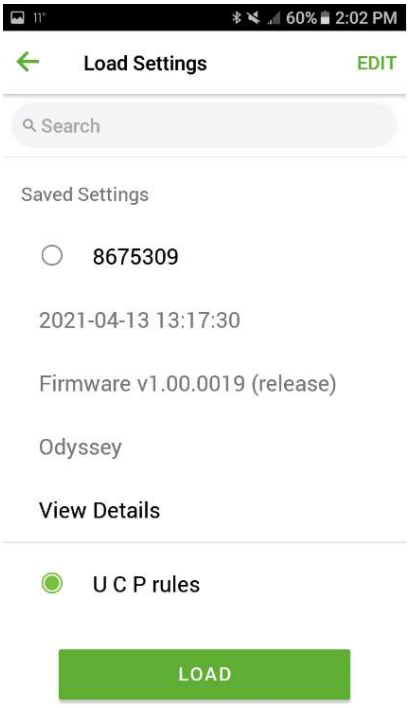

Sometimes you will see this, just try again.

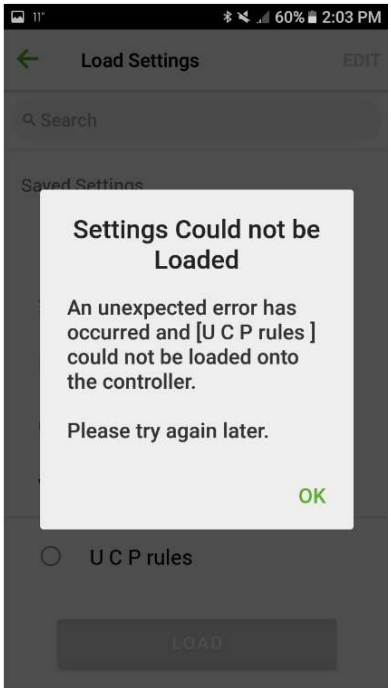

Important!

Be sure the units are exactly the same. Do not try to create a settings file from a SZVAV unit and load them into a CV unit or vice versa.

We did this in Tech Support and almost bricked a Symbio 700 board.

View Configuration Sub-Menu

Equipment Configuration

System Type - VVZT/ CVZT *(VVZT is SZVAV)*

Refrigeration System – Cooling Only, Heat Pump

Refrigerant – R22, R410a

Voltage - 208/230 -60, 380/415-50, 380/60, 460/60, 575/60

Efficiency - Standard

Tonnage - R-22 - 7.5, 10, 15, 20, R-410A - 6, 6.25, 7.5, 8.33, 10, 12.5, 15, 20 (+ 25 for TTA)

Refrigeration Circuit – Single Dual

Indoor Fan Type – Single Speed, Multi Speed, Variable Speed

Variable Speed is the only option on VVZT

Space Controller – Conventional TStat, Single SP Zone Sensor, Dual SP Zone Sensor

Evaporator Defrost Control – Enabled, Not Enabled

(Compressor off 3 min for 10 min runtime)

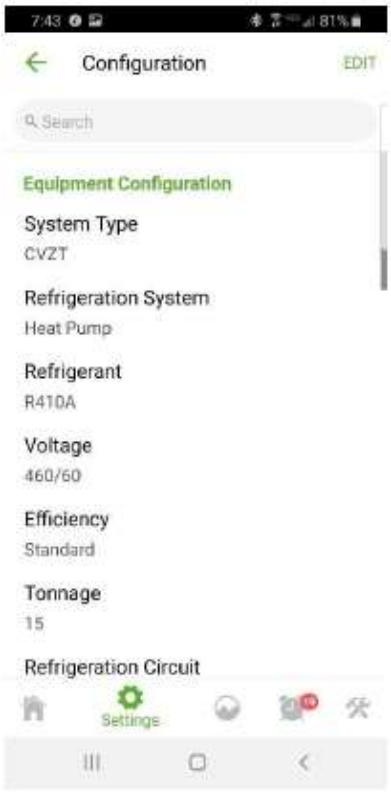

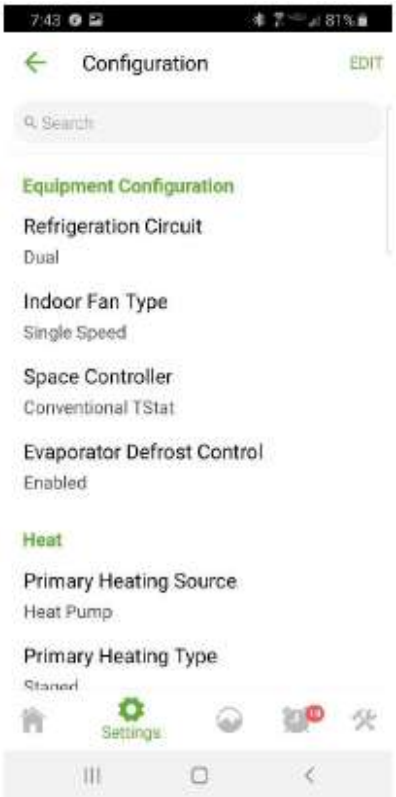

Heat

Primary Heating Source – Not Installed, Electric

Primary Heating Type - Staged

Primary Heating Stages – 1,2

Secondary Heating Source – Not Installed, Electric

Secondary Heating Type - Staged

Secondary Heating Stages – 1,2



Optional Devices

Ventilation Override – Installed, Not Installed

(On future Customer Module)

External Auto Stop – Installed, Not Installed

(On future Fresh Air Module?)

Frostat – Installed, Not Installed

On Indoor Options Module as HTL (a snap disc in the VFD enclosure)

Alarm Indicator - Installed, Not Installed

(On future Customer Module)

Demand Management – None, Demand Limit, Demand Shed

(*Set to Demand Limit to use EDC Switch on Evap. Coil)*

Humidity Sensor – Installed, Not Installed

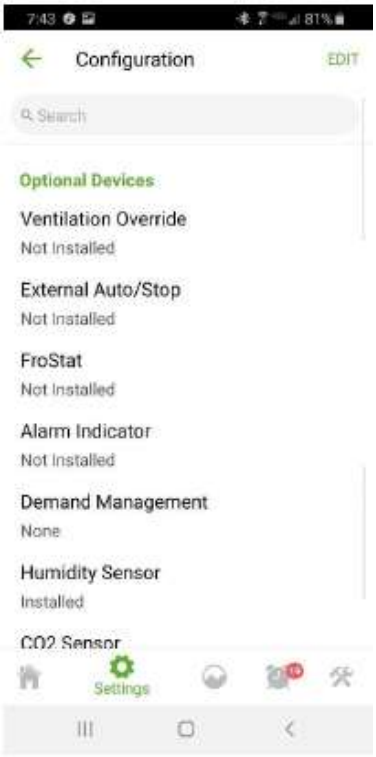

CO2 Sensor – Installed, Not Installed

Supply Air Tempering – Enabled, Disabled

Discharge Air Sensor – Installed, Not Installed

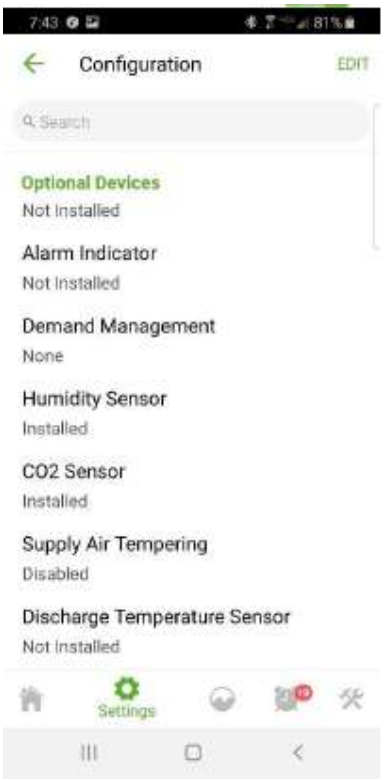

Below * Indicates some Default Settings

Includes comments on some menu items

Any items value that is green can be overridden, this is a very small list.

All overrides are for 30 minutes and at priority 8 (not adjustable)

The override icon is Purple, a point is overridden at priority 8-16 (can be overridden)

Grey when a point is overridden at priority 1-7 (can't be overridden)

This page refreshes every 30 seconds, to manually refresh swipe down or press refresh.

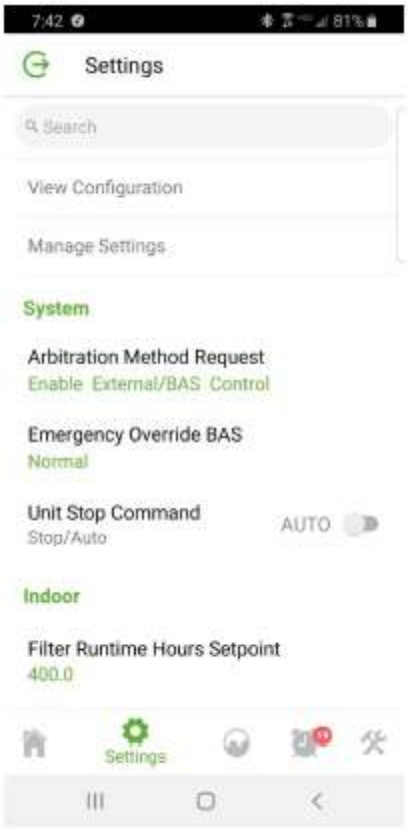

CVZT TStat	CVZT ZS	VVZT ZS	VVZT TStat		
				System	
X	X	X	X	Arbitration Method Request	Enable External / BAS Control, *Standalone Control
X	X	X	X	Emergency Override BAS	*Normal, Pressurize, Depressurize, Purge, Shutdown
	X	X		Heat Cool Mode Request	Auto
	X	X		Occupancy Request	Auto
	X	X		Occupied Bypass Time	120
	X	X		Occupied Standby Cooling Setpoint BAS	78
	X	X		Occupied Standby Heating Setpoint BAS	67
	X	X		Space Cooling Setpoint High Limit BAS	90
	X	X		Space Cooling Setpoint Low Limit BAS	50
	X	X		Space Heating Setpoint High Limit BAS	80
	X	X		Space Heating Setpoint Low Limit BAS	50
	X	X		Supply Fan Configuration Command	Continuous / Cycling
	X	X		Timed Override Request	*Idle
X	X	X	X	Unit Stop Command	Stop/*Auto
	X	X		Unoccupied Cooling Setpoint	85
	X	X		Unoccupied Heating Setpoint	60
		X		VVZT DAT Control Mode	*Auto / Manual

CVZT	CVZT ZS	VVZT ZS	VVZT		
				Indoor	
X	X	X	X	Filter Runtime Hours Setpoint	*0
		X	X	Supply Fan Maximum Speed Setpoint (*vfd)*	100%
		X	X	Supply Fan Minimum Speed Setpoint (*vfd*)	0%
X	X	X	X	Supply Fan Speed Command	*0%
X	X	X	X	Supply Fan Speed Command Enable	Enabled/*Disabled *(you can run the fan here with no call)*
			X	VVZT DAT Control Mode	Manual/*Auto
				Refrigeration	
		X		Compressor Cooling P-Gain (%/F)	80%
		X		Compressor Cooling P-Gain-1 (%/F)	2%
		X		Compressor Cooling P-Gain-2 (%/F)	5%
		X		Compressor Cooling Reset Time	500 sec
		X		Compressor Cooling Reset Time 1	1000 sec
		X		Compressor Cooling Reset Time 2	80 sec
X	X	X	X	Cooling Capacity Enable	default 100%
X	X	X	X	Cooling Capacity Setpoint BAS	*you can run the cooling here with no call - default 0%*
X	X	X	X	Cooling Capacity Setpoint Enable BAS	Enabled/*Disabled
X	X	X	X	Cooling Demand Limit Capacity Enable Setpoint	*Set to 0% for EDC Switch*
X	X	X	X	Cooling Lockout BAS	Locked out / *Normal
		X		Discharge Air Cooling Setpoint (Target)	55
		X		Discharge Air Temperature Maximum Cool Limit	104
		X		Discharge Air Temperature Minimum Cool Limit	50 (DACR POT)

CVZT TStat	CVZT ZS	VVZT ZS	VVZT TStat		
				Heat	
	X	X		Auxiliary Heating P - Gain (%/F)	80.00%
	X	X		Auxiliary Heating Reset Time (seconds)	500 sec
X	X	X	X	Heat Lockout Command	Locked out / *Normal
X	X	X	X	Heat Primary Enable BAS	default 100%
				Heat Pump Heating Lockout Setpoint	default -40
	X	X		Heating Capacity Setpoint BAS	default 0%
	X	X		Heating Capacity Setpoint Enable BAS	Enabled/*Disabled
X	X	X	X	Heating Demand Limit Capacity Enable Setpoint	default 100%
				Supply Air Tempering	Enable / *Disable

STATUS

Active

Status

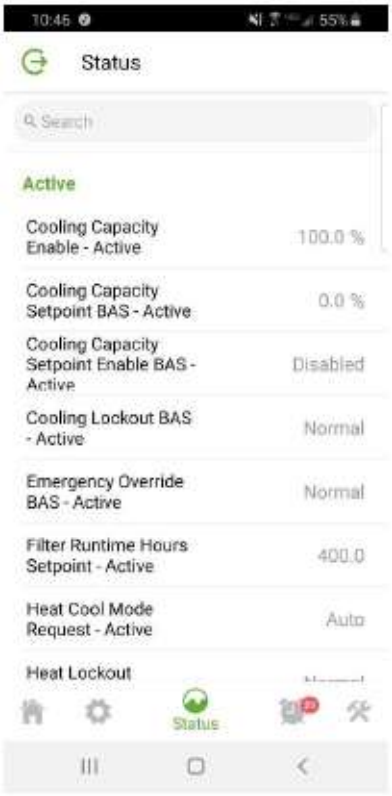

Cooling Capacity Enable - Active

Cooling Capacity Setpoint BAS - Active

Cooling Capacity Setpoint Enable BAS - Active

Cooling Demand Limit Capacity Enable Setpoint

Cooling Lockout BAS - Active

Demand Limit Request - Active

Discharge Air Cooling Setpoint (Target) Active

Discharge Air Temperature Maximum Cool Limit Active

Discharge Air Temperature Minimum Cool Limit Active

Discharge Air Temperature Setpoint Active

Emergency Override BAS - Active

Filter Runtime Hours Setpoint - Active

Heat Cool Mode Request Active

Heat Lockout Command - Active

Heat Primary Enable BAS - Active

Heat Pump Heating Lockout Setpoint - Active

Heating Capacity Setpoint BAS - Active

Heating Capacity Setpoint Enable BAS - Active

Heating Demand Limit Capacity Enable Setpoint - Active

Occupancy Request Active

Occupied Standby Cooling Setpoint BAS

Occupied Standby Heating Setpoint BAS

Space Temperature Cooling Setpoint Input Active

Space Temperature Heating Setpoint Input Active

Space Temperature Setpoint Active

Supply Air Tempering Enable active

Supply Fan Configuration Status

Supply Fan Maximum Output Frequency Status

Supply Fan Maximum Speed Setpoint - Active

Supply Fan Minimum Output Frequency Status

Supply Fan Minimum Speed Setpoint - Active

Supply Fan Speed Command - Active

Supply Fan Speed Command Enable - Active

VVZT DAT Control Mode Active

System

Alarm Indicator Status

Demand Limit Input

Demand Limit Request BAS

Override value *Not Limited

Override Duration *30 Minutes

Equipment Shutdown Input Status

Heat Cool Mode Status

Outdoor Air Temperature Active

Outdoor Air Temperature Arbitrator

Outdoor Air Temperature BAS

Override Value *0° F

Outdoor Air Temperature Local

Phase Monitor Status

Space Temp Cooling Setpoint Status

Space Temp Heating Setpoint Status

Space Temperature Active

Space Temperature Arbitrator

Space Temperature BAS

Space Temperature Cooling Setpoint Input

Space Temperature Heating Setpoint Input



Space Temperature Setpoint Active

Supply Air Tempering Status

System Mode Switch Input

System Mode Switch Local

Timed Override Input

Timed Override Status

Timed Override Timer Is Active

Thermostat G Input

Thermostat W1/O Input

Thermostat W2 Input

Thermostat X2 Input

Thermostat Y1 Input

Thermostat Y2 Input

Unit Stop Source

Indoor

Discharge Air Temperature Local

Filter Runtime Hours

Run Time - Supply Fan (Hours)

Starts - Supply Fan

Supply Fan Current

Supply Fan Power

Supply Fan Speed Command Status

Supply Fan Speed Status

Supply Fan Status

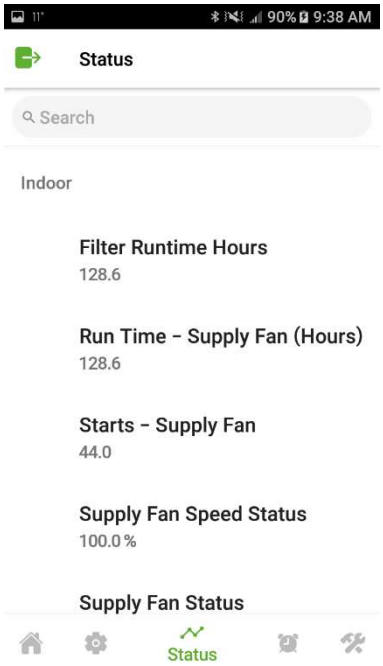

Refrigeration

Circuit 1 Defrost Status

Circuit 1 LPC Status

Circuit 2 Defrost Status

Circuit 2 LPC Status

Coil Temperature Sensor 1

Coil Temperature Sensor 2

Compressor 1 Command Status

Compressor 1 Proving Status

Compressor 2 Command Status

Compressor 2 Proving Status

Condenser Defrost Status

Condenser Fan 1 Command Status

Condenser Fan 2 Command Status

Cooling Capacity Status

Evaporator Defrost Status

Frostat Input

Refrigerant Type

Run Time - Compressor 1 (Hours)

Run Time - Compressor 2 (Hours)

Run Time Condenser Fan 1 (Hours)

Run Time Condenser Fan 2 (Hours)

Starts - Compressor 1

Starts - Compressor 2

Starts - Condenser Fan 1

Starts - Condenser Fan 2

Switchover Valve 1 Command

Switchover Valve 2 Command

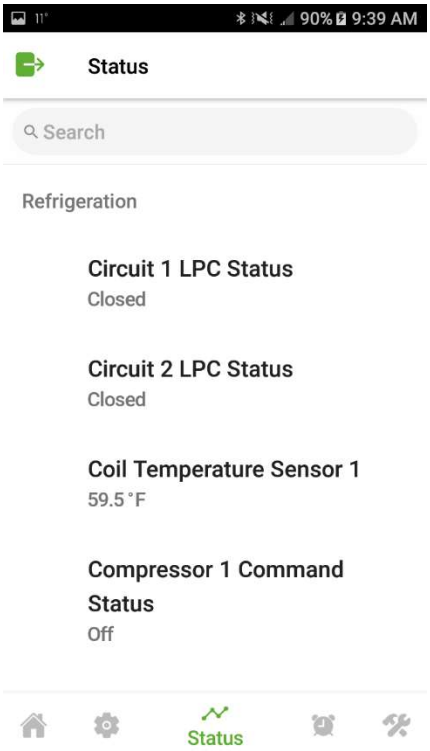

Heat

Electric Heat Stage 1 Status

Electric Heat Stage 2 Status

Heat Secondary Capacity Status

Heating Capacity Primary Status

Run Time - Electric Heat Stage 1 (Hours)

Run Time - Electric Heat Stage 2 (Hours)

Starts - Electric Heat Stage 1 (Hours)

Starts - Electric Heat Stage 2 (Hours)

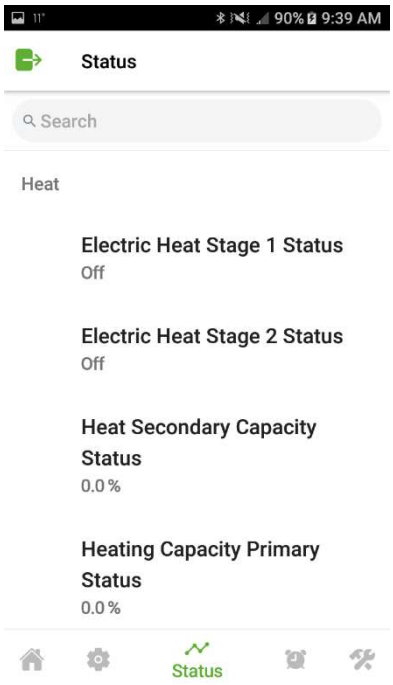

If CO2 is installed

Under Status, System you will have

Space CO2 Concentration Active

Space CO2 Concentration Arbitrator

Space CO2 Concentration BAS

Space CO2 Concentration Input

If Humidity Sensor is Installed

Space Humidity Active

Space Humidity Arbitrator

Space Humidity BAS

Space Humidity Input

Custom

USB Port 1

ALARMS

Critical

Service Required

Advisory

Information

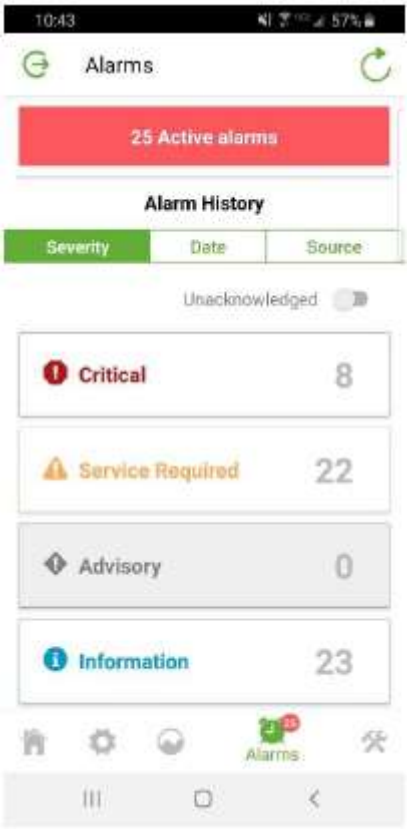

You can clear the Alarm History in TU.

TOOLS


Tools


1:02
82%
Tools
Service Test Mode
Export Data Logs
Service
Protocol Configuration
IP Configuration
Regional Specifications
Intelligent Services
TGP2 Programs
Backup
Restore
Update Firmware
Tools

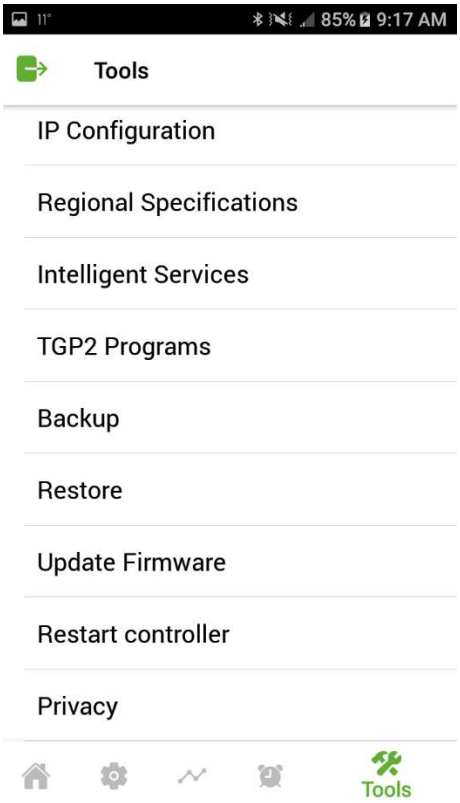
85% 9:17 AM
Tools
IP Configuration
Regional Specifications
Intelligent Services
TGP2 Programs
Backup
Restore
Update Firmware
Restart controller
Privacy
Tools

Service Test Mode

Default time to stay in a test mode is 60 minutes then the mode will revert back to the Inactive State

This time can be changed in TU and on the on-board UI, cannot be changed from the mobile app

Fan On

Cool 1

Cool 2

Heat 1

Heat 2

Heat 3

Heat 4

Defrost

Emergency Heat





Export Data Logs

This page will not be available on Units sold through the residential channel.
The export data log functionality will create a CSV file each trend and save it to the attached USB mass storage device.
Format is <Controller name>_trend_<name of point trended>.csv
When there is no USB device connected or an unsupported device an error message will occur.
Depending on the size and number of trends this can a few minutes.

Service

Service Sub-Menu

Diagnostics

Reset Diagnostics



Static Reset

Compressor 1 Run Time Reset

Compressor 1 Starts Reset

Compressor 2 Run Time Reset

Compressor 2 Starts Reset

Condenser Fan 1 Run Time Reset

Condenser Fan 1 Starts Reset

Condenser Fan 2 Run Time Reset

Condenser Fan 2 Starts Reset

Filter Timer Reset

Supply Fan Run Time Reset

Supply Fan Starts Reset

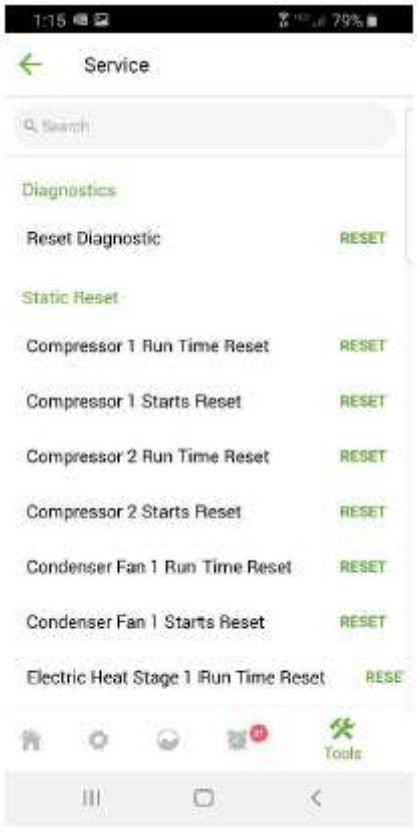

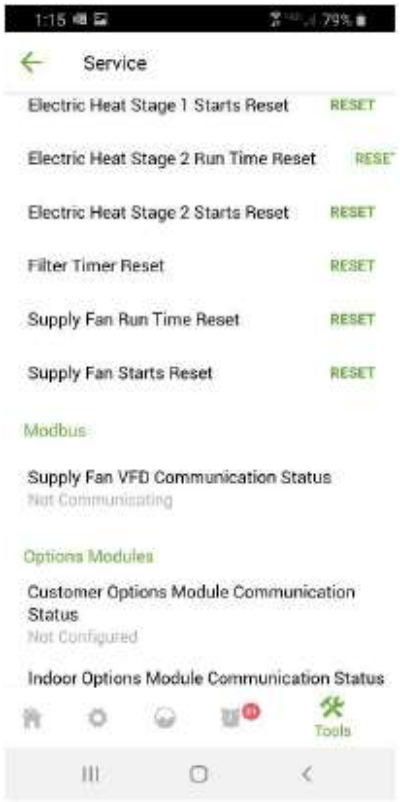

Modbus

Supply Fan VFD Communication Status

Options Modules

Customer Options Module Communication Status

Indoor Options Module Communication Status

On-Board I/O Communication Status

On-Board I/O Firmware Major Version

On-Board I/O Firmware Minor Version



Expansion Modules

IMC Link Reset

Use this if the address was set wrong on the Indoor Options Board, or the Indoor Options Module is not communicating.

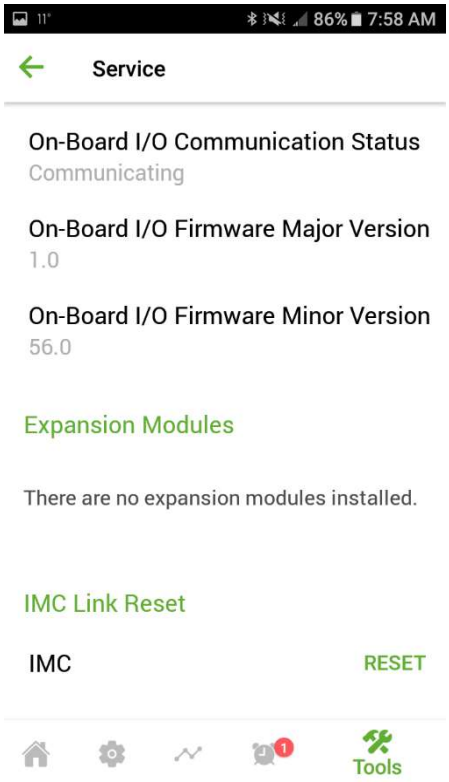

Customer Connection Polarity

This feature is in Tools, Service, then scroll all the way to the bottom.

You can change the operation of the Demand Limit input and the Emergency Stop input with this feature in the Phone App.

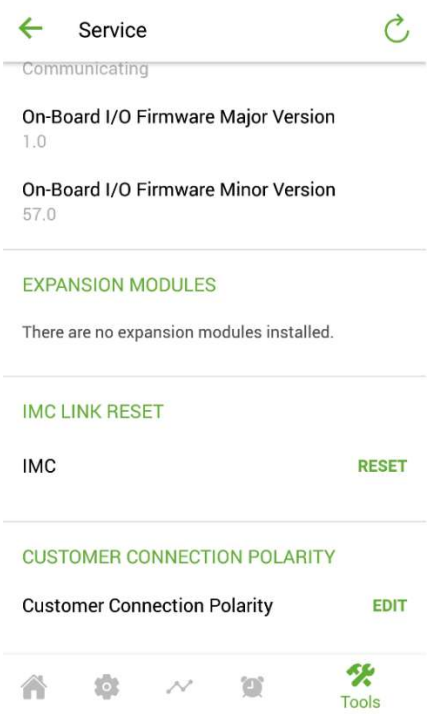

Demand Limit Input (UC J16-2)

If the Demand Limit Input is set to Normal, a 24 VAC input on UC J16-2 will turn off the compressor(s).

If the Demand Limit Input is set to Reversed, a 24 VAC input is needed on UC J16-2 for the compressor(s) to run.

This will allow either a Normally Open EDC coil switch or a Normally Closed EDC coil switch.

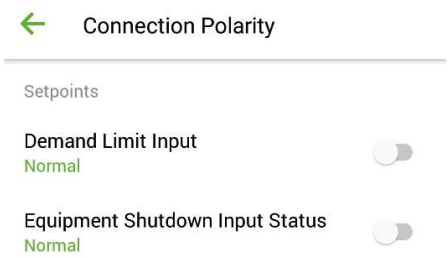

Equipment Shutdown Input Status (UC J18-2)

If the Equipment Shutdown Input Status is set to Normal, a 24 VAC Input on UC J18-2 will immediately shutdown the unit.

If the Equipment Shutdown Input Status is set to Reversed, a 24 VAC input on UC J18-2 is needed for the unit to run.

This will allow either a Normally Open Shutdown Device or a Normally Closed Shutdown Device.

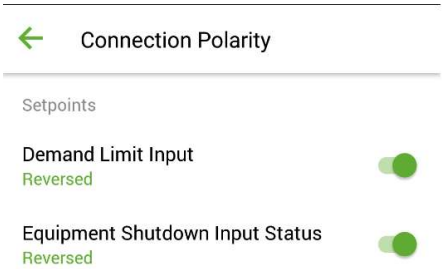

IP Configuration

Host Name

Ethernet 1

Port State

Configure IP Address

Mac Address

IP Address

Subnet Mask

Default Gateway

DNS

Primary DNS Server

Secondary DNS Server

Tertiary DNS Server



Regional Specifications

Set automatically via this device

Time Zone

Time

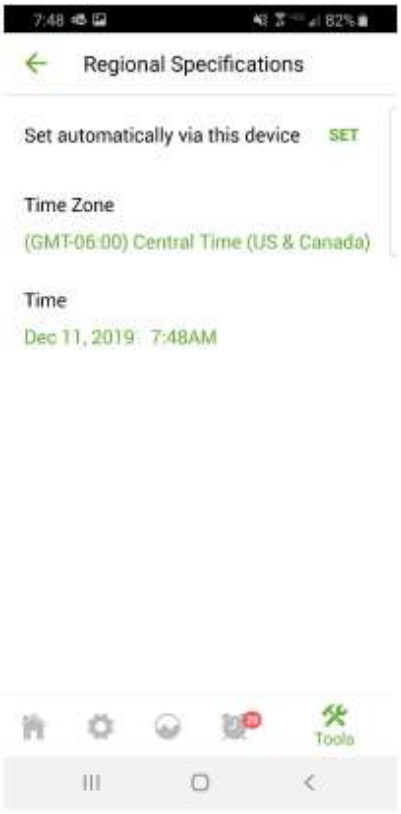

Intelligent Services

Data Collection

Remote Access

Status

Test Connection

TGP2 Programs



Backup



Backup, Restore & Firmware Updates

The Symbio 700 supports the Backup and Restore Feature similar to how other Trane UCs support the feature.

There are two instances of this feature for consideration:

Standard Backup & Restore

Backup

The Symbio 700 configuration and settings can be “backed-up” to a file on a USB drive connected to the Symbio 700.

If a USB drive is connected to the Symbio 700, the “Backup” process can be initiated through the Mobile Service Tool

Once Complete, a Backup (.tgx) file will be placed onto the USB drive.

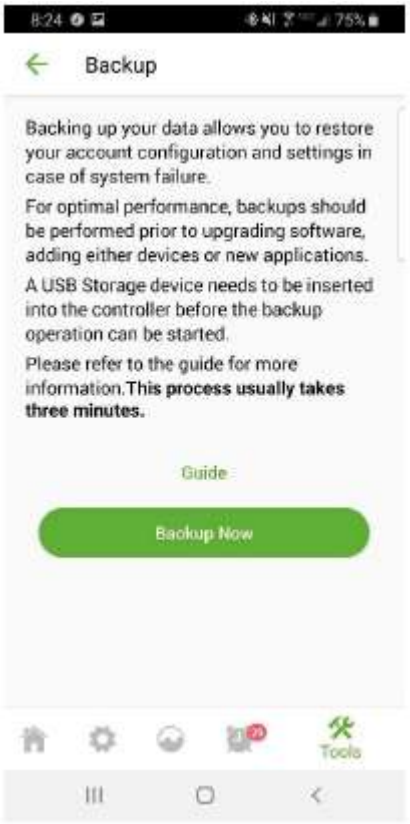

Restore

If a USB drive is connected to the controller, with a valid controller “Backup” file installed, the user can initiate the “Restore” process through the Mobile Service Tool

Restoring a Backup will apply all configuration and controller settings from the “Backup” file to the controller.

When the restore is complete the user is disconnected from the controller and taken to the unit list.



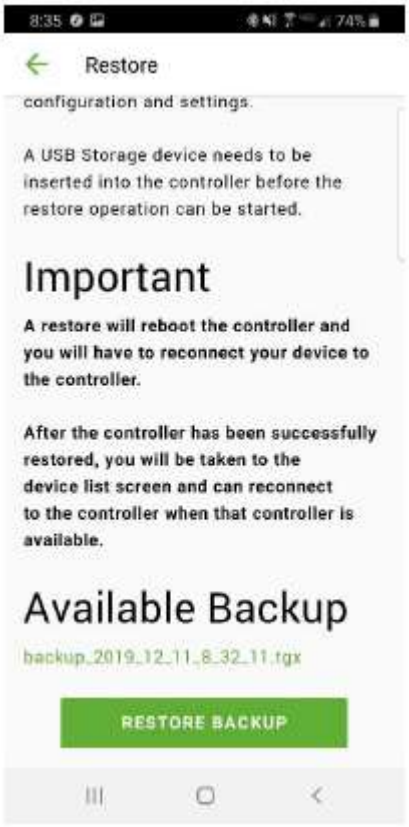

Restore To Factory Defaults (Baseline Backup)

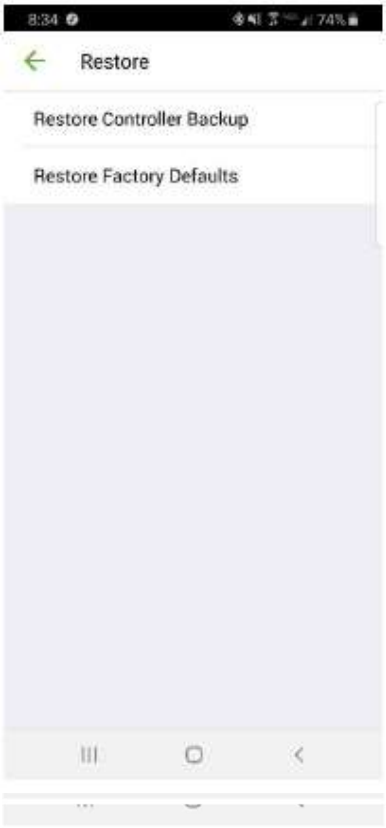

At time of manufacture, a “Baseline Backup” of the Symbio 700 is created. This backup contains the same information as a normal backup but it can’t be removed from the controller and it can’t be overwritten. The baseline backs are included in a backup file but will only be restored onto a controller that doesn’t contain a baseline backup.

The Baseline Backup is stored on the Symbio 700 and includes all settings/configuration items at their values as manufactured.

The Baseline Backup can be restored through the Mobile Service Tool and is intended to be used as a mechanism to restore the controller to factory defaults.

Once initiated this process cannot be undone and should only be used if a technician wants to completely “start-over” the setup of a piece of equipment.

If a controller is replaced in the field, the replacement controller will not have a baseline backup

Restore to factory defaults restores a baseline backup that is saved on the controller.

Baseline backups are created during the manufacturing process, replacement controllers will not have a baseline backup.

When there isn’t a baseline backup the button will be greyed out.

When the baseline backup restore is complete the user is disconnected from the controller and taken to the unit list.

Update Firmware

Scan For Firmware

Firmware Update

Similar to restoring a controller “Backup” file to the Symbio 700, the user can initiate a Firmware Update from the Mobile Service Tool.

A valid firmware file must be in a USB drive connected to the Symbio 700.

At this time, the user can “Update Firmware” from the Mobile Service Tool.

A firmware update will not change configurations or point setup parameters – this is different from restoring a controller Backup file.

Caveat: If Firmware is being downgraded, the controller database is cleared



Download the latest Symbio 700 Firmware for Odyssey products at:

https://www.trane.com/commercial/north-america/us/en/products-systems/packaged-units-and-split-systems/split-systems/odyssey-6-to-25-tons.html#downloads

If using a mobile device to complete the Symbio 700 firmware update:

Place the downloaded Symbio 700 Firmware for Odyssey products onto a USB mass storage device. The USB drive should be formatted as FAT32.

Using a Bluetooth enabled mobile phone, download the Symbio Service & Installation mobile app from the appropriate app store.

Install the USB mass storage device into the USB Host connector in the top left corner of the Symbio 700 controller.

Power up the Symbio 700 controller.

After the Symbio Service & Installation app has been installed, reference the Symbio Service & Installation Quick Start Guide (BAS-SVN043*) for instructions on how to pair the mobile phone with the Symbio 700 controller.

After a connection has been established, initiate the firmware update process using the Symbio Service & Installation App.

Navigate to the “Tools” menu of the mobile app.

Select the “Update Firmware” process

Navigate to the appropriate firmware file that is located on the USB mass storage device and select it.

Confirm the Firmware Update to initiate the process

NOTE: The Firmware Update process may take 3-5 minutes once initiated.

After the firmware update has been completed, power down the system and remove the USB mass storage device.

Restart Controller

Restart Controller



Privacy

This will remove the BLE pairing information on the embedded controller, the user will be required to re-pair with the controller.

This is to comply with California regulations

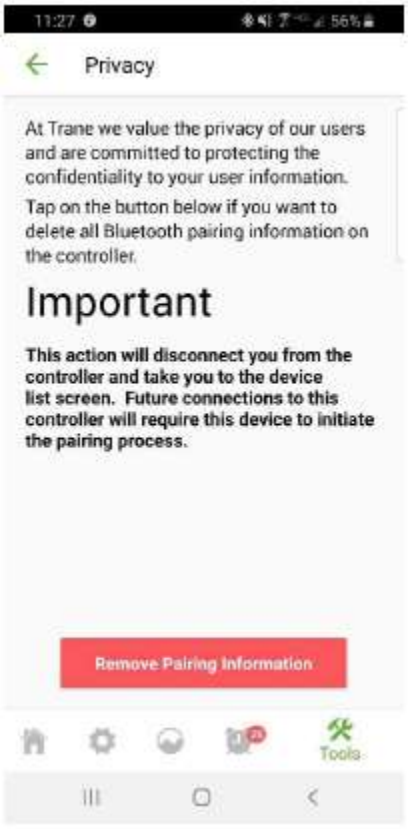

Notes

Notes

Symbio 700 UC Onboard User Interface Menu Structure

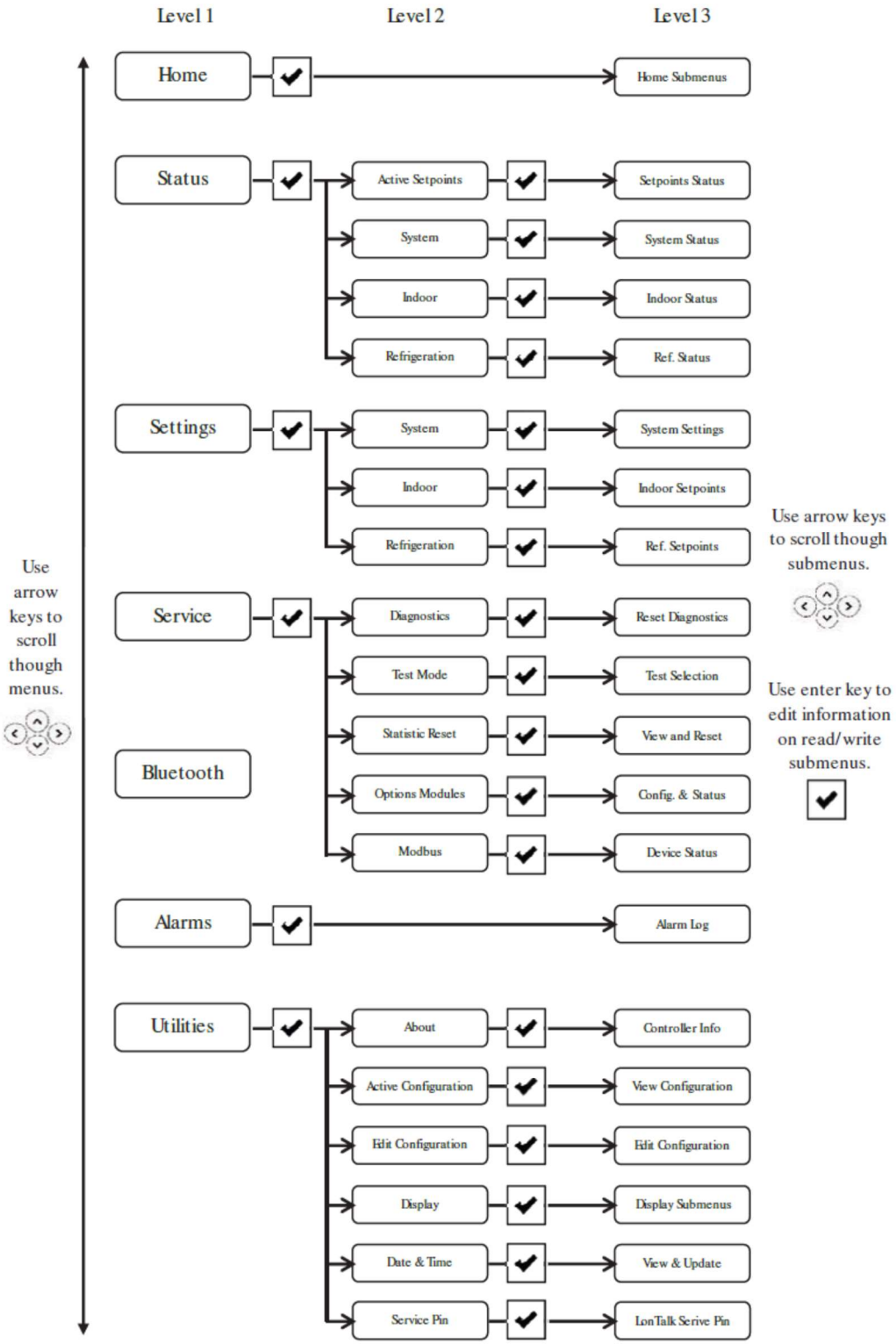

Symbio 700 UC Onboard User Interface Menu Items

Think very hard before trying to use this feature for configuring the unit!

The preferred method is the Phone App.

User interface keypad

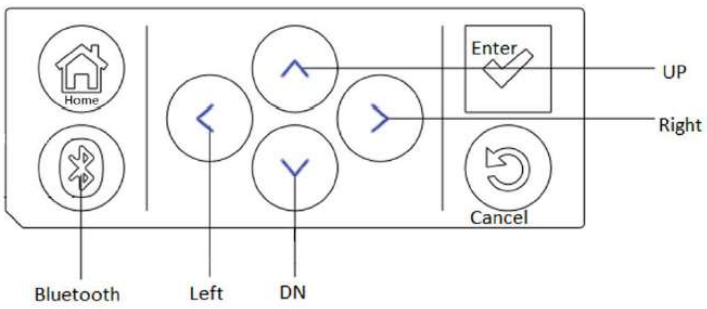

User interface buttons

Button	Description
Up/down	Allow the user to scroll the menus and submenus.
Left/right	Allow the user to scroll between values for editable items.
✔	• Allows user to drill down into a component of the menu tree. • Confirm data changes on writable data. When data is editable, the data point's least significant digit flashes with a cursor. If the data has multiple editable digits, the user scrolls the curser left and right to choose the editable digit. Once the editing is complete, the data is not changed and propagated through the controller until the **Enter** button is tapped.
⌂	Tap to exit all submenus and return to the Home screen.
ᛒ	Tap to go to the Bluetooth menu and initiate the Bluetooth device pairing sequence.
↩	Tap to return to the previous menu level.

HOME

Cooling Capacity Status %

Heat Cool Mode Status

Heat Secondary Capacity Status

Heating Capacity Primary Status

Occupancy Status

Space Temperature Active

Space Temperature Setpoint Active

Supply Fan Speed Status

Thermostat G Input

Thermostat W1/O Input

Thermostat W2 Input

Thermostat X2 Input

Thermostat Y1 Input

Thermostat Y2 Input

Status

Active Setpoints

Cooling Capacity Enable - Active

Cooling Capacity Setpoint BAS - Active

Cooling Capacity Setpoint Enable BAS - Active

Cooling Demand Limit Capacity Enable Setpoint - Active

Cooling Lockout BAS - Active

Demand Limit Request - Active

Demand Shed Offset Setpoint - Active

Discharge Air Cooling Setpoint (Target) - Active

Discharge Air Temperature Maximum Cool Limit - Active

Discharge Air Temperature Minimum Cool Limit - Active

Discharge Air Temperature Setpoint Active

Emergency Override BAS - Active

Filter Runtime Hours Setpoint - Active

Heat Cool Mode Request - Active

Heat Lockout Command - Active

Heat Primary Enable BAS - Active

Heat Pump Heating Lockout Setpoint - Active

Heating Capacity Setpoint BAS - Active

Heating Capacity Setpoint Enable BAS - Active

Heating Demand Limit Capacity Enable Setpoint - Active

Occupancy Request Active

Occupied Standby Cooling Setpoint BAS - Active

Occupied Standby Heating Setpoint BAS - Active

Space Temperature Cooling Setpoint Input Active

Space Temperature Heating Setpoint Input Active

Space Temperature Setpoint Active

Space Temperature Setpoint Input Active

Supply Air Tempering Enable - Active

Supply Fan Configuration Status

Supply Fan Maximum Output Signal - Active

Supply Fan Maximum Speed Setpoint - Active

Supply Fan Minimum Output Signal - Active

Supply Fan Minimum Speed Setpoint - Active

Supply Fan Speed Command - Active

Supply Fan Speed Command Enable - Active

VVZT DAT Control Mode – Active

System

Heat Cool Mode Status

Occupancy Input

Occupancy Input - AirFi

Occupancy Input Active

Occupancy Input Arbitrator

Occupancy Input BAS

Occupancy Status

Occupied Cooling Setpoint BAS

Occupied Heating Setpoint BAS

Outdoor Air Temperature Active

Outdoor Air Temperature Arbitrator

Outdoor Air Temperature BAS

Outdoor Air Temperature Local

Phase Monitor Status

Secondary Application Mode Status

Sensor Battery Status Air-Fi

Space CO2 Concentration Active

Space CO2 Concentration Air-Fi

Space CO2 Concentration Arbitrator

Space CO2 Concentration BAS

Space CO2 Concentration Input

Space Humidity Active

Space Humidity Air-Fi

Space Humidity Arbitrator

Space Humidity BAS

Space Humidity Input

Space Temp Cooling Setpoint Status

Space Temp Heating Setpoint Status

Space Temperature Active

Space Temperature Air-Fi

Space Temperature Arbitrator

Space Temperature BAS

Space Temperature Cooling Setpoint Air-Fi

Space Temperature Cooling Setpoint Input

Space Temperature Heating Setpoint Air-Fi

Space Temperature Heating Setpoint Input

Space Temperature Input

Space Temperature Setpoint Air-Fi

Space Temperature Setpoint BAS

Space Temperature Setpoint Input

Supply Air Tempering Status

Supply Fan Configuration Command Arbitrator

System Mode Switch Air-Fi

System Mode Switch Input

System Mode Switch Local

Thermostat G Input

Thermostat W1/O Input

Thermostat W2 Input

Thermostat X2 Input

Thermostat Y1 Input

Thermostat Y2 Input

Timed Override Air-Fi

Timed Override Input

Timed Override Status Active

Timed Override Status Arbitrator

Timed Override Timer Is Active

Unit Stop Source

Ventilation Override Exhaust Status

Ventilation Override Pressurize Status

Ventilation Override Purge Status

Indoor

Discharge Air Temperature Local

Filter Runtime Hours

Run Time - Supply Fan (Hours)

Starts - Supply Fan

Supply Fan Current

Supply Fan Output Status

Supply Fan Power

Supply Fan Signal Command Status

Supply Fan Speed Status

Refrigeration

Circuit 1 Defrost Status

Circuit 1 LPC Status

Circuit 2 Defrost Status

Circuit 2 LPC Status

Coil Temperature Sensor 1

Coil Temperature Sensor 2

Compressor 1 Command Status

Compressor 1 Proving Status

Compressor 1 Unloader Command Status

Compressor 2 Command Status

Compressor 2 Proving Status

Compressor 2 Unloader Command Status

Condenser Fan 1 Command Status

Condenser Fan 2 Command Status

Cooling Capacity Status

Defrost Status

Evaporator Defrost Status

FroStat Input

Refrigerant Type

Run Time - Compressor 1 (Hours)

Run Time - Compressor 2 (Hours)

Run Time - Condenser Fan 1 (Hours)

Run Time - Condenser Fan 2 (Hours)

Starts - Compressor 1

Starts - Compressor 2

Starts - Condenser Fan 1

Starts - Condenser Fan 2

Switchover Valve 1 Command Status

Switchover Valve 2 Command Status

Heat

Electric Heat Stage 1 Status

Electric Heat Stage 2 Status

Heat Secondary Capacity Status

Heating Capacity Primary Status

Run Time - Electric Heat Stage 1 (Hours)

Run Time - Electric Heat Stage 2 (Hours)

Starts - Electric Heat Stage 1

Starts - Electric Heat Stage 2

Settings

System

Arbitration Method Request

Demand Shed Offset Setpoint

Emergency Override BAS

Heat Cool Mode Request

Occupancy Request

Occupied Bypass Time

Occupied Offset

Occupied Standby Cooling Setpoint BAS

Occupied Standby Heating Setpoint BAS

Occupied Standby Offset

Space Cooling Setpoint High Limit BAS

Space Cooling Setpoint Low Limit BAS

Space Heating Setpoint High Limit BAS

Space Heating Setpoint Low Limit BAS

Supply Fan Configuration Command

Timed Override Request

Unit Stop Command

Unoccupied Cooling Setpoint

Unoccupied Heating Setpoint

VVZT DAT Control Mode

Indoor

Filter Runtime Hours Setpoint

Supply Fan Maximum Speed Setpoint

Supply Fan Minimum Speed Setpoint

Supply Fan Speed Command

Supply Fan Speed Command Enable

Refrigeration

Compressor Cooling P-Gain - 1 (%/F)

Compressor Cooling P-Gain - 2 (%/F)

Compressor Cooling P-Gain (%/F)

Compressor Cooling Reset Time - 1 (seconds)

Compressor Cooling Reset Time - 2 (seconds)

Compressor Cooling Reset Time (seconds)

Compressor Heating P-Gain (%/F)

Compressor Heating Reset Time (seconds)

Cooling Capacity Enable

Cooling Capacity Setpoint BAS

Cooling Capacity Setpoint Enable BAS

Cooling Demand Limit Capacity Enable Setpoint

Cooling Lockout BAS

Discharge Air Cooling Setpoint (Target)

Discharge Air Temperature Maximum Cool Limit

Discharge Air Temperature Minimum Cool Limit

Heat

Auxiliary Heating P-Gain (%/F)

Auxiliary Heating Reset Time (seconds)

Heat Lockout Command

Heat Primary Enable BAS

Heat Pump Heating Lockout Setpoint

Heating Capacity Setpoint BAS

Heating Capacity Setpoint Enable BAS

Heating Demand Limit Capacity Enable Setpoint

Supply Air Tempering Enable

Service

Diagnostics

Reset Diagnostic

Test

Performance Test State Request

Service Test State Request

Service Test Timeout (Minutes)

Statistics Reset

Compressor 1 Run Time Reset

Compressor 1 Starts Reset

Compressor 2 Run Time Reset

Compressor 2 Starts Reset

Condenser Fan 1 Run Time Reset

Condenser Fan 1 Starts Reset

Condenser Fan 2 Run Time Reset

Condenser Fan 2 Starts Reset

Electric Heat Stage 1 Run Time Reset

Electric Heat Stage 1 Starts Reset

Electric Heat Stage 2 Run Time Reset

Electric Heat Stage 2 Starts Reset

Filter Timer Reset

Supply Fan Run Time Reset

Supply Fan Starts Reset

Options Modules

Customer Options Module Communication Status

Customer Options Module Firmware Major Version

Customer Options Module Firmware Minor Version

Indoor Options Module Communication Status

Indoor Options Module Firmware Major Version

Indoor Options Module Firmware Minor Version

On-Board I/O Communication Status

On-Board I/O Firmware Major Version

On-Board I/O Firmware Minor Version

Modbus

Supply Fan VFD Communication Status

Utilities

About

Symbio 700 Software Version

Symbio Options Module 1 Software Version

Symbio Options Module 2 Software Version

Active Configuration

Refrigeration Circuit

Indoor Fan Type

Primary Heating Source

Secondary Heating Source

Ventilation Override

External Auto / Stop

Frostat

Alarm Indicator

Space Controller

Demand Management

Humidity Sensor

CO2 Sensor

Supply Air Tempering

Evaporator Defrost

Discharge Temperature Sensor

Edit Configuration

Clear & Reconfig.

Edit Configuration

System Type - CVZT, VVZT

Space Controller - Conventional TSTAT, Single Setpoint Zone Sensor, Dual Setpoint Zone Sensor

Indoor Fan Type – CV - Single Speed, Multi Speed, VV – Variable Speed

Refrigeration System - Cooling Only, Heat Pump

Refrigerant - R22, R410A

Tonnage - R-22 - 7.5, 10, 15, 20, R-410A - 6, 6.25, 7.5, 8.33, 10, 12.5, 15, 20 (+25 for TTA)

Refrigeration Circuit - Single, Dual

Voltage - 208/230 -60, 380/415-50, 380/60, 460/60, 575/60

Efficiency - Standard,

Evaporator Defrost - Installed, Not Installed

Primary Heating Source - Not Installed, Electric

Primary Heating Type - Staged

Secondary Heating Type - Not Installed, Electric

Primary Heating Stages - 1, 2

Frostat - Installed, Not Installed

Humidity Sensor - Installed, Not Installed

CO2 Sensor - Installed, Not Installed

Discharge Temp Sensor - Installed, Not Installed

External Auto Stop - Installed, Not Installed

Ventilation Override - Installed, Not Installed

Alarm Indicator - Installed, Not Installed

Demand Management - None, Demand Limit, Demand Shed

Supply Air Tempering - Disabled

Display

Backlight Timeout

Display Units

Scrolling Speed -Lower # faster it goes

Date and Time

Current Time

Time Zone

LON

Service Pin Request

Test Mode on an Odyssey Symbio using the Onboard User Interface.

Initiating Test Mode

Press the Home Button

Down Arrow to Service

Press the Check Mark

Down Arrow to Test

Press the Check Mark

Down Arrow to Service Test – DO NOT USE PREFORMANCE TEST!

Press the Check Mark

The I on Inactive flashes

Down Arrow to what you want to test

Press the Check Mark.

Exiting Test Mode

Press the Check Mark.

Up arrow to Inactive

Press the Check Mark

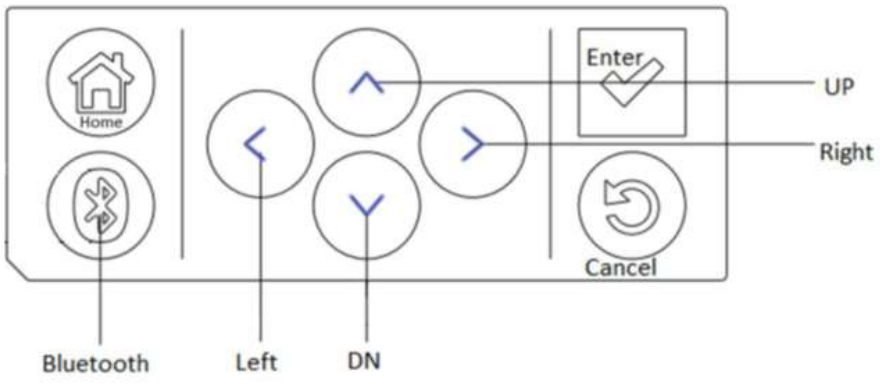

Interconnecting Wiring Between Condensers and Air Handlers

Communication Wire Info.

Note: ***If you have a VFD with a Symbio Condenser you must run BOTH Adapter Board J15-3 & 4 to Relay Board J4-3 & 4 and Adapter Board J16-1 & 2 to Relay Board J7-1 & 2 twisted pair!***

Use the correct communication wire to ensure reliable communication between the Condenser and the Air Handler.

Recommended wire Part Number is below.

Other wire may be used if it conforms to the following physical characteristics:

• Twisted pair (2-conductor) plus shield.

• Characteristic Impedance: 100 and 130 ohms.

• Distributed capacitance between conductors: < 100 pF/m.

• Distributed capacitance between conductor and shield: < 200 pF/m.

• Foil or braided shield is acceptable.

• Wire diameter: 22 to 18 AWG.

TRANE PURPLE WIRE Recommended

Part Number	Business Unit	Description
CAB01568	US Manufacture	CABLE; COMLINK CABLE WITH A PVC JACKET, 18/1 PR, STRANDED SHIELD, 25PF PLENUM, 100 FOOT LENGTH

Part Number	Business Unit	Description
CAB01569	US Manufacture	CABLE; COMLINK CABLE WITH A PVC JACKET, 18/1 PR, STRANDED SHIELD, 25PF PLENUM, 1000 FOOT LENGTH

Thermostat Wire Info.

Recommended thermostat wire size

Wire Size	Maximum Wire Length
(Gauge)	Physical distance between Unit & T'stat
22	30 Feet
20	50 Feet
18	75 Feet
16	125 Feet
14	200 Feet

Part #	Mfg #	AWG/Cond	Length
WIR03774	55308T407	18/8	250'

18 AWG SOL BC Barostat™ II Thermostat Wire with Brown Reels

- *UL Listed Type CL2, cUL Listed Type CM or CMH/FTI*



Part #	Mfg #	AWG/Cond	Length
WIR02573	3001820000	18/2	500'
WIR02574	3001830000	18/3	500'
WIR02576	3001850000	18/5	250'
WIR02577	3001860000	18/6	250'
WIR02579	3001880000	18/8	250'
WIR02581	3018100000	18/10	250'

“Officially” Allowed Pairings

Symbio Condenser with a Symbio CV Air Handler = Pairing A

Symbio Condenser with a Symbio SZVAV / 2-Speed Air Handler = Pairing B

Legacy Electromechanical Condenser with a Symbio 2-Speed Only Air Handler = Pairing C

Symbio Condenser with a Legacy CV Air Handler

Symbio Condenser with a Legacy 2-Speed Air Handler

Legacy Electromechanical Condenser with a Symbio CV Air Handler

Legacy Reliatel Condenser with a Symbio CV Air Handler

Pairing A: Symbio Condenser with Symbio CV Air Handler or
Pairing B: Symbio Condenser Symbio SZVAV / 2 Speed Air Handler

1. Wire Zone Sensor to J19 or Thermostat to J21 on the Symbio 700 UC in the outdoor unit.

   Connections between Condenser and Air Handler

2. **All A and B Pairings**

   Thermostat Wire – 4 wires *(recommend running wires in step 3 on all A & B Pairings)*
   a. Symbio Condenser Adapter Board J15-1 & 2 to Symbio Air Handler Relay Board J10-1 & 2. *(power for Air Handler RB)*
   b. Symbio Condenser Adapter Board J18-1 to Symbio Air Handler Relay Board J5-4. *(indoor fan run)*
   c. Symbio Condenser (UC) J16-2 to Symbio Air Handler Relay Board J5-1. *(EDC)*

   If using the EDC in the Air Handler – in Edit Configuration set Demand Management to Demand Limit and in Settings, Refrigeration set Cooling Demand Limit Capacity Enable Setpoint to 0%

3. **With VFD or Electric Heat** *(or if Electric Heat will be added in the future)*

   Thermostat Wire – 2 Wires inside Air Handler
   a. Symbio Condenser Relay Board J10-1 & 2 to Symbio Air Handler Relay Board J4-1 & 2.

   Shielded Twisted Pair *(ground shield in air handler)*
   b. Symbio Condenser Adapter Board J15-3 & 4 to Symbio Air Handler Relay Board J4-3 & 4.

4. **VFD Units only**

   Thermostat Wire – 1 Wire
   a. Symbio Condenser Adapter Board J16-3 to Symbio Air Handler Relay Board J7-3

   Shielded Twisted Pair *(ground shield in air handler)*
   b. Symbio Condenser Adapter Board J16-1 & 2 to Symbio Air Handler Relay Board J7-1 & 2

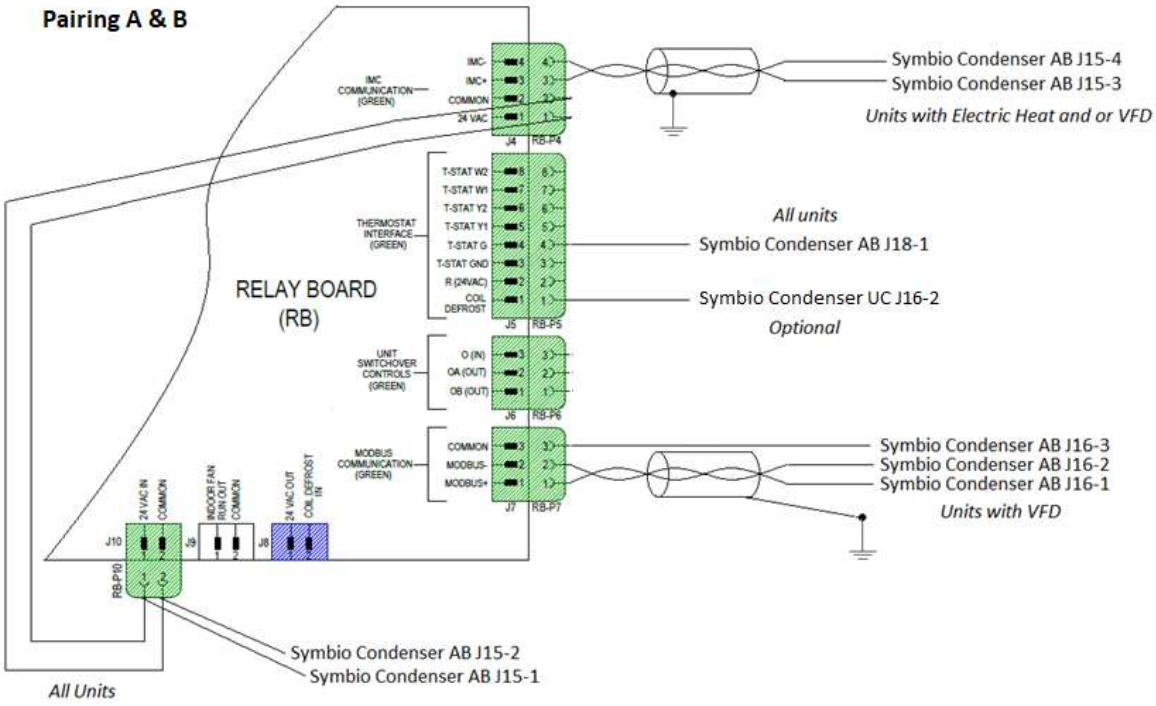
Pairing A & B
IMC COMMUNICATION (GREEN)
IMC-
IMC+
COMMON
24 VAC
J4
RB-P4
Symbio Condenser AB J15-4
Symbio Condenser AB J15-3
Units with Electric Heat and or VFD
THERMOSTAT INTERFACE (GREEN)
T-STAT W2
T-STAT W1
T-STAT Y2
T-STAT Y1
T-STAT G
T-STAT GND
R (24VAC)
COIL DEFROST
J5
RB-P5
All units
Symbio Condenser AB J18-1
Symbio Condenser UC J16-2
Optional
RELAY BOARD
(RB)
UNIT SWITCHOVER CONTROLS (GREEN)
O (IN)
OA (OUT)
OB (OUT)
J6
RB-P6
MODBUS COMMUNICATION (GREEN)
COMMON
MODBUS-
MODBUS+
J7
RB-P7
Symbio Condenser AB J16-3
Symbio Condenser AB J16-2
Symbio Condenser AB J16-1
Units with VFD
J10
24 VAC IN
COMMON
J9
INDOOR FAN RUN OUT
COMMON
J8
24 VAC OUT
COIL DEFROST IN
RB-P10
Symbio Condenser AB J15-2
Symbio Condenser AB J15-1
All Units

Pairing C: Legacy Electromechanical Condenser with Symbio 2-Speed Air Handler

Wire thermostat to Air Handler Relay Board J5 except for thermostat R, wire that to J10-1.

Connections between Condenser and Air Handler

1. **Thermostat Wire – 4 wires**
    a. Electromechanical Condenser LTB1-R to Symbio Air Handler Relay Board J10-1.
    b. Electromechanical Condenser LTB1-B1 to Symbio Air Handler Relay Board J10-2.
    c. Electromechanical Condenser LTB1-Y1 to Symbio Air Handler Relay Board J5-5.
    d. Electromechanical Condenser LTB1-Y2 to Symbio Air Handler Relay Board J5-6.

Note: W1 and W2 connections are needed only if air handler has an electric heat accessory installed. A new electric heater must be used with a Symbio air handler. **Legacy electric heaters cannot be reused on Symbio air handlers.**

2. If the EDC (Evaporator Defrost Control) thermostat is used, follow these steps:
    a. Switch is shipped in the normally open configuration. Move wire from terminal “H” to terminal “L” on EDC switch, enabling normally closed switch operation.
    b. Cut the EDC Black wire from plug J8-1 and move to J10-2
    c. Add a thermostat wire from AB J5-1 to Condenser LTB1-B2

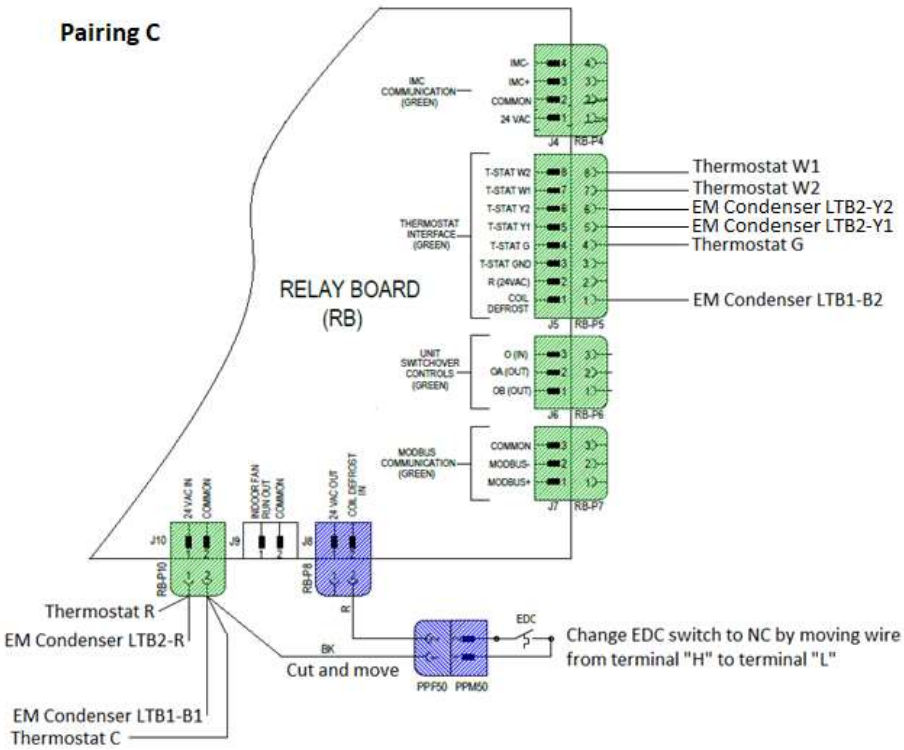

Symbio Condenser (Cooling or Heat Pump) with Legacy CV Air Handler

Wire the thermostat to the Symbio 700 J21 except for R and C, wire thermostat R to Symbio Adapter Board J15-1, wire thermostat C to Symbio Adapter Board J15-2.

Connections between Condenser and Air Handler

1. **Thermostat Wire – 3 Wires w/o electric heat, 5 wires with electric heat.**
    a. Symbio Condenser Adapter Board J15-1 to LTB2-R in the air handler.
    b. Symbio Condenser Adapter Board J15-2 to LTB2-B1 in the air handler.
    c. Symbio Condenser Adapter Board J18-1 to LTB2-G in the air handler.
    d. Symbio Condenser UC J21-3 to Air Handler LTB2-W1.
    e. Symbio Condenser UC J21-5 to Air Handler LTB2-W2.

Note: A Zone Sensor will not control Electric Heat.

Primary Heating Source: If the Air Handler has Electric Heat, be sure to configure the Symbio 700 UC for **Primary Heating Source – Not Installed** or you will get a Diagnostic for Options Module Comm Fail (The Symbio 700 will still turn the Indoor Fan on with a W1 call)

2. If using the EDC (Evaporator Defrost Control) thermostat in the legacy air handler.

    a. Run a thermostat wire from LTB2-CD to UC J16-2.
    b. Using the Phone App go to Tools, Service, Customer Connection Polarity and change Demand Limit Input to Reversed.
    c. In Settings, Edit Configuration set Demand Management to Demand Limit and in Settings, Refrigeration set Cooling Demand Limit Capacity Enable Setpoint to 0%.

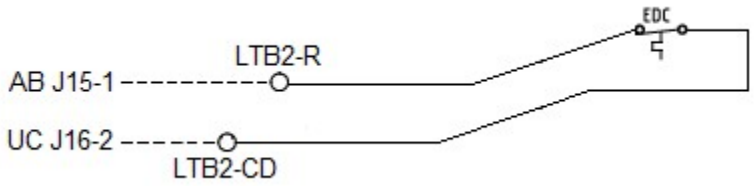

Symbio Condenser (Cooling Only) with Legacy 2 Speed Electromechanical Air Handler

Wire the thermostat to the Symbio 700 J21 except for R and C, wire thermostat R to Symbio Adapter Board J15-1, wire thermostat C to Symbio Adapter Board J15-2.

Connections between Condenser and Air Handler

1. **Thermostat Wire – 4 Wires w/o electric heat, 5 Wires with electric heat**

    a. Symbio Condenser Adapter Board J15-1 to Air Handler LTB2-R.
    b. Symbio Condenser Adapter Board J15-2 to Air Handler LTB2-B1.
    c. Symbio Condenser UC J21-6 to Air Handler LTB2-Y2. *(Y1 is not used in the Air Handler)*
    d. Symbio Condenser Adapter Board J18-1 to Air Handler LTB2-G.
    e. Symbio Condenser UC J21-3 to Air Handler LTB2-W1 *(W1 and W2 are jumped together in the Air Handler to take care of activating the HSR1)*

2. **Symbio Configuration**

    a. **Indoor Fan Type:** When connecting the SymbioTM Condenser to an electromechanical air handler with 2-speed fan operation, ensure that the Symbio 700 UC Indoor Fan Type configuration is set to its default "**Single Speed**" selection. The Air Handler Relay Board will take care of switching the fan speeds based on the thermostat call.

    b. **Primary Heating Source:** If the Air Handler has Electric Heat, be sure to configure the Symbio 700 UC for **Primary Heating Source – Not Installed** or you will get a Diagnostic for Options Module Comm Fail (The Symbio 700 will still turn the Indoor Fan on with a W1 call)

3. If using the EDC (Evaporator Defrost Control) thermostat in the legacy air handler.
    a. Run a thermostat wire from LTB2-CD to UC J16-2.
    b. Using the Phone App go to Tools, Service, Customer Connection Polarity and change Demand Limit Input to Reversed.
    c. In Settings, Edit Configuration set Demand Management to Demand Limit and in Settings, Refrigeration set Cooling Demand Limit Capacity Enable Setpoint to 0%

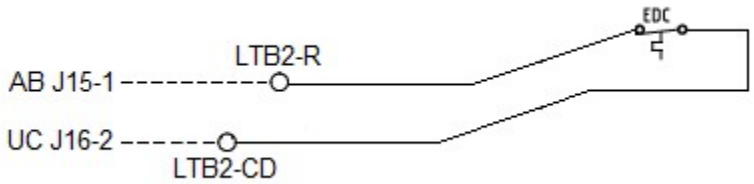

Legacy Electromechanical Condenser with Symbio CV Air Handler

Wire thermostat to the Air Handler Relay Board J5 except for R and C, wire R to the Symbio Air Handler Relay Board J10-1, wire “COM” to Symbio Air Handler Relay Board J10-2.

Connections between the Condenser and Air Handler

1. **Thermostat Wire – 4 wires**

    a. The Y1 from the thermostat will go directly to the Condenser LTB1-Y1.
    b. The Y2 from the thermostat will go directly to the Condenser LTB1-Y2.
    c. Condenser LTB1-R to Symbio Air Handler Relay Board J10-1.
    d. Condenser LTB1-B1 to Symbio Air Handler Relay Board J10-2.

Note: W1 and W2 connections are needed only if air handler has an electric heat accessory installed. A new electric heater must be used with a Symbio air handler. **Legacy electric heaters cannot be reused on Symbio air handlers.**

2. If the EDC (Evaporator Defrost Control) thermostat is used, follow these steps:
    a. Switch is shipped in the normally open configuration. Move wire from terminal “H” to terminal “L” on EDC switch, enabling normally closed switch operation.
    b. Cut the EDC Black wire from plug J8-1 and move to J10-2
    c. Add a thermostat wire from AB J5-1 to Condenser LTB1-B2

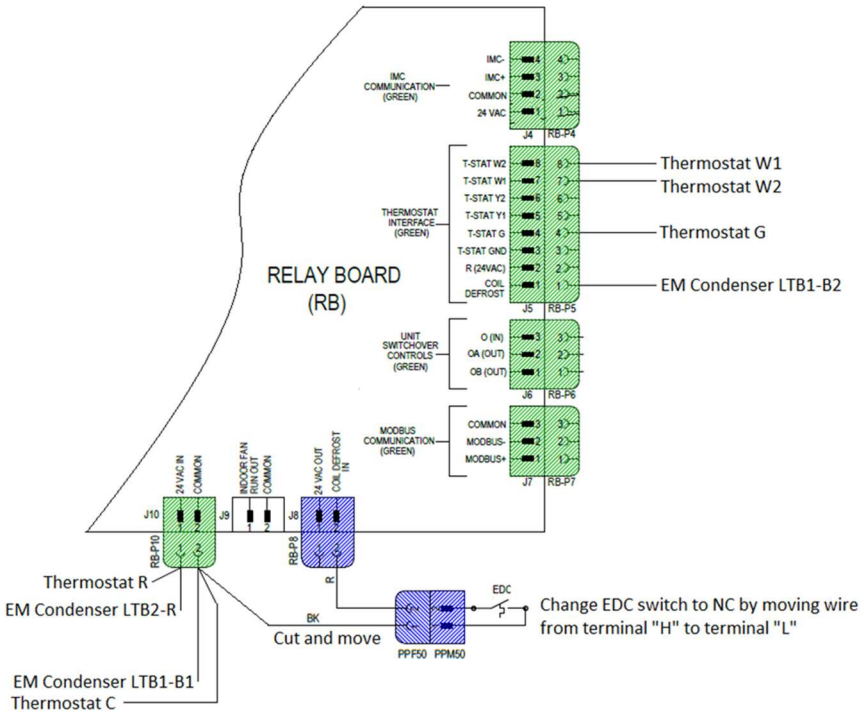

Legacy Reliatel Condenser (Cooling or Heat Pump) with Symbio CV Air Handler

Maintain and make no changes to wiring from zone control devices and/or Building Management System wiring to RTRM module in Reliatel condenser.

Connections Between the Condenser and Air Handler

1. **Thermostat Wire**
    a. Condenser LTB2-R to Air Handler Relay Board J10-1
    b. Condenser LTB2-B to Air Handler Relay Board J10-2
    c. Condenser LTB1-EF to Air Handler Relay Board J5-4
    d. Condenser LTB1-H1 to Air Handler Relay Board J5-7
    e. Condenser Ltb1-H2 to Air Handler Relay Board J5-8

Note: H1 and H2 connections are needed only if air handler has an electric heat accessory installed. A new electric heater must be used with a Symbio air handler.
Legacy electric heaters cannot be reused on Symbio air handlers.

2. If the EDC (Evaporator Defrost Control) thermostat is used, follow these steps:
    a. Switch is shipped in the normally open configuration. Move wire from terminal “H” to terminal “L” on EDC switch, enabling normally closed switch operation.
    b. Add a wire from LTB2-CD to Air Handler Relay Board J5-1

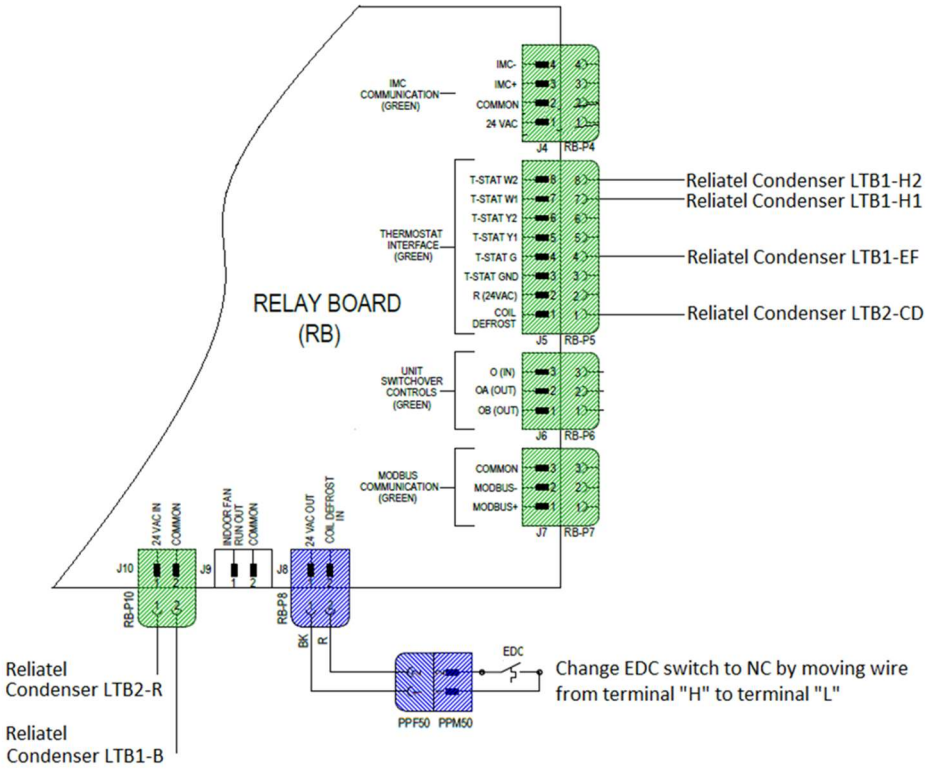

Odyssey Air Handler R22 and R410a TXV Valve Conversion Guide

Converting R22 Odyssey Air Handlers to R410a Compatible – Cooling Only Applications – Heat Pump Applications Require a 3rd Party Indoor Coil Replacement
Air handler must be manufactured after 2004 to be applied with R410a

R22 Model	R22 Tons	Inlet x Outlet	R410a Tons	R410a Part #
TWE060A	4	3/8” x 1/2”	4	VAL09478
TWE060B	2	3/8” x 1/2"	2	VAL09476
TWE090A	8	1/2" x 7/8”	8	VAL08785
TWE090B	3	3/8” x 1/2”	3	VAL09477
TWE120A	8	1/2" x 7/8”	8	VAL08785
TWE120B	4	3/8” x 1/2"	4	VAL09478
TWE180B	8	1/2” x 7/8”	8	VAL08785
TWE240B	8	1/2" x 7/8”	8	VAL08785

Converting R410a Odyssey Air Handlers to R22 Compatible – Cooling Only and Heat Pump Applications

R410a Model	R410a Tons	Inlet / Outlet	R22 Tons	R22 Part #
TWE061D	6	1/2" x 5/8”	6	VAL08084
TWE061E	3 (2)	1/2" x 5/8”	3 (2)	* VAL08081
TWE073D	N/A	N/A	N/A	N/A
TWE073E	N/A	N/A	N/A	N/A
TWE090D	8	1/2" x 7/8”	8	VAL04911
TWE090E	5 (2)	1/2” x 5/8”	5 (2)	VAL08083
TWE120D	8	1/2" x 7/8”	8	VAL04911
TWE120E	6 (2)	1/2" x 5/8”	6 (2)	VAL08084
TWE150E	8 (2)	1/2" x 5/8”	8 (2)	VAL04911
TWE180E	8 (2)	1/2” x 5/8”	8 (2)	VAL04911
TWE240E	8 (2)	1/2” x 7/8”	8 (2)	VAL04911
TWE300E	12.5 (2)		11.5 (2)	EBSVE11 (sporlan)

* Note: VAL08081 has a 3/8” inlet x 1/2" outlet

All Thermostatic Expansion Valves in this guide are adjustable.

Odyssey Refrigeration Miscellaneous Info.

Microchannel Heat Exchanger Condensers (MCHE)

This design improves heat transfer and the refrigerant that enters the coil quickly turns to liquid.

The MCHE tube volume holds very little refrigerant, so the refrigerant charge of the system is reduced. However, the tube volume is so small that if the flow of refrigerant out of the MCHE condenser is slowed much more than the flow of refrigerant into the MCHE condenser, the condenser may quickly fill with liquid and cause a high-pressure control trip. To avoid this condition, the designer or servicer should not include the following:

• Pump-down: The storage capacity of the MCHE won't support pump-down.

• Trim solenoid: The storage capacity of the MCHE won't support partial shut-off of the evaporator coil.

Solenoid Valves

In TTA split systems, solenoid valves may be used to isolate the refrigerant from the evaporator during the off cycles. This is only done when the indoor unit is well below the outdoor unit.

The solenoid valve on the TTA unit is a drop solenoid—open when the compressor is on, and off when the compressor is off.

When you wire a Solenoid Valve to energize with a Y1 or Y2 thermostat call you will run into problems in Test Mode and on 10 and 20 ton dual circuit units!

If used, the solenoid requires code compliant wiring to the TTA condensing unit. (*just a suggestion…you could wire a 24 VAC solenoid in parallel with the compressor contactor*)

Notes:

• Solenoids should not be used in the TWA heat pumps due to the reverse flow of the liquid.

Moisture-Indicating Sight glass

Be sure to install one moisture-indicating sight glass in the main liquid line.

Note: The sole value of the glass is its moisture indicating ability.

Use the Charging Charts—not the sight glass—to determine proper charge levels**.**

Hot Gas Bypass

Systems should be designed to avoid HGBP whenever possible. But, if HGBP is necessary for the application - like 100% OA - then the system must be designed to support HGBP.

As an example, the line lengths are limited to 75 feet.

For more information, please reference Trane Application Guide Hot Gas Bypass Installation Guidelines for Direct Expansion (DX) Equipment, APP-APG017-EN.

Line Sizing

For line lengths 25 feet or less use the line sizes in the unit IOM.

For line lengths greater than 25 feet, use the line sizes in the Odyssey Application Guide (SS-APG008*-EN).

Oil-Traps

Trane does not recommend oil traps on any application.

Leak Checking

Pressurize the system through the gauge port with dry nitrogen to 200 psi.

System Evacuation

Attach appropriate hoses from manifold gauge to gas and liquid line pressure taps.

Evacuate the system to hold a 500 micron vacuum.

Close off valve to vacuum pump and observe the micron gauge. If gauge pressure rises above 500

microns in one minute, then evacuation is incomplete, or the system has a leak.

If vacuum gauge does not rise above 500 microns in 10 minutes, the evacuation should be complete.

Unit Charging

The charging charts below lists Refrigerant Charge and Base matched unit charge.

Refrigerant Charge is for exactly 25 feet of line length. (Chart Note 1)

Base matched unit charge is for 0 feet of line length (Chart Note 2)

For example, using this chart

Refrigerant charge table and line size with matched TWE air handler:

	Refrigerant Charge (lbs)		Per Circuit	
Matched Set	Circuit 1	Circuit 2	Liquid Line Diameter	Vapor Line Diameter
TTA0724*D w/ TWE0724*B	7.0	7.0	0.5 (1/2")	0.875 (7/8")

NOTE 1: Charge amount listed is for 25 ft line length.
NOTE 2: Base matched unit charge is 5.2 lbs for each circuit. Additional charge is 1.15 ounces of refrigerant per foot of line set as specified in table above. For additional information refer Application guide SS-APG008*-EN

Base charge 5.2, Ounces per foot 1.15

Distance between units 15 feet, (15 X 1.15) /16 = 1.08 lbs + 5.2 = 6.28 lbs.

Distance between units 25 feet, (25 X 1.15) /16 = 1.8 lbs + 5.2 = 7.0 lbs.

Distance between units 50 feet, (50 X 1.15) /16 = 3.6 lbs + 5.2 = 8.8 lbs.